M.E. Collection
G-8064-LM37S-T
M.E. Round Diverter Valve Trim Plate and Handle

Product Features

- Single metal lever handle
- Decorative trim plate WITHOUT off function
- To complete package, you must order G-7058 3-way PBV diverter rough valve

Code compliance

- ADA

Available Finishes
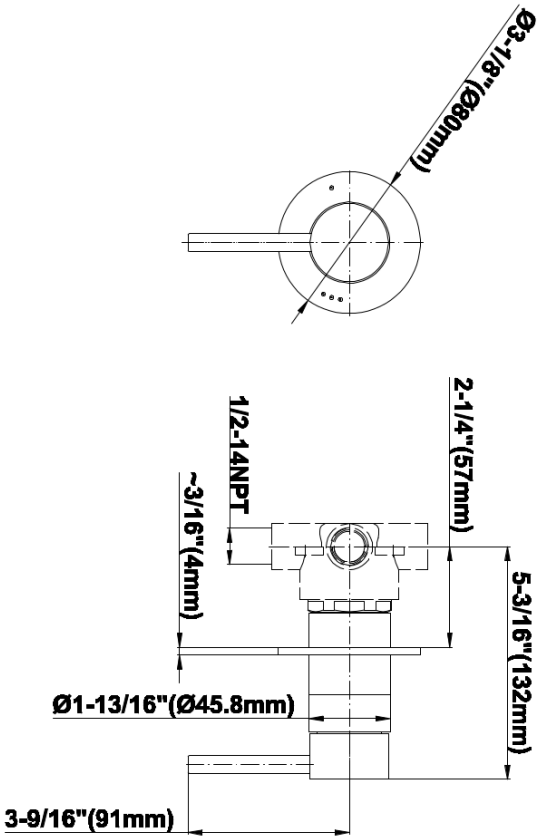
M.E. Collection
G-8064-LM37S-T
M.E. Round Diverter Valve Trim Plate and Handle