Lauren Collection
**G-8086-LM22C2-T**
Lauren M-Series Valve Trim with Two Handles

## Product Features

- Two metal handles
- Decorative trim plate
- Use with M-Series rough valves

## Available Finishes
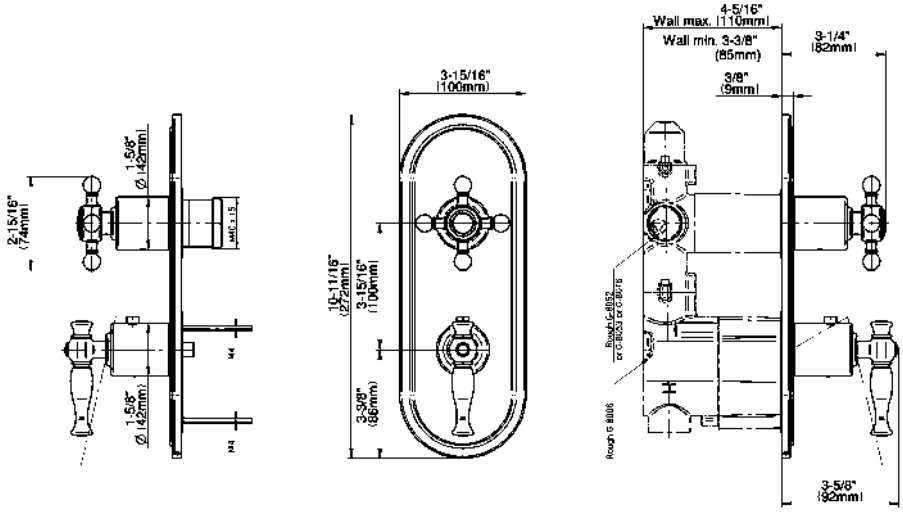
Lauren Collection
**G-8086-LM22C2-T**
Lauren M-Series Valve Trim with Two Handles