Lauren Collection
G-3801-LM22M
Lauren Lavatory Faucet

Product Features

- Single-hole faucet
- Aerated flow rate ? 1.2 max gpm
- Includes pop-up drain assembly with lift rod and overflow
- Optional matching decorative trap G-9973

Code compliance

- CALGreen

Available Finishes
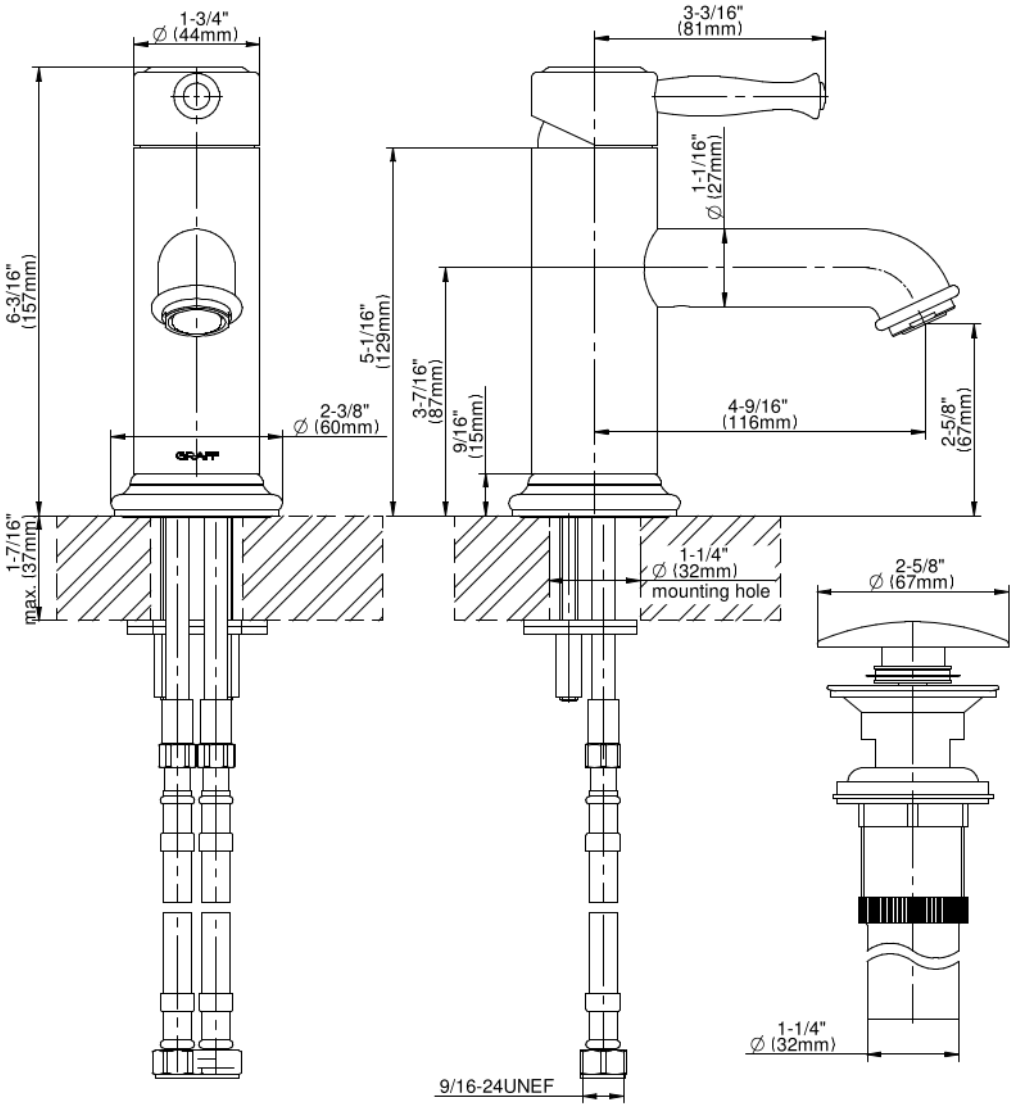
Lauren Collection
G-3801-LM22M
Lauren Lavatory Faucet