Lauren Collection
G-2452-LM22
Lauren Roman Tub

Product Features

- 1-1/3" hole cutout (x3)
- Aerated spout flow rate ~7 gpm @ 45 psi
- Matching deck-mounted handshower and diverter set available

Code compliance

- ADA

Available Finishes
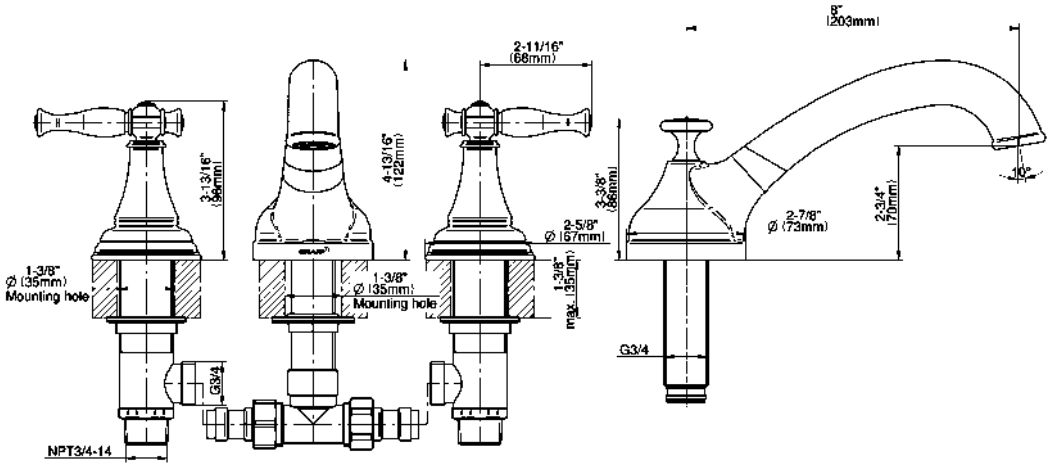
Lauren Collection
G-2452-LM22
Lauren Roman Tub