Lauren Collection
G-2430-C21B-T
Lauren Wall-Mounted Lavatory Faucet

Product Features

- Installs on 8
- Aerated flow rate ?1.2 max gpm
- 7-1/16" spout reach
- Drain assembly not included
- Optional matching decorative trap G-9973

Code compliance

- CALGreen

Available Finishes
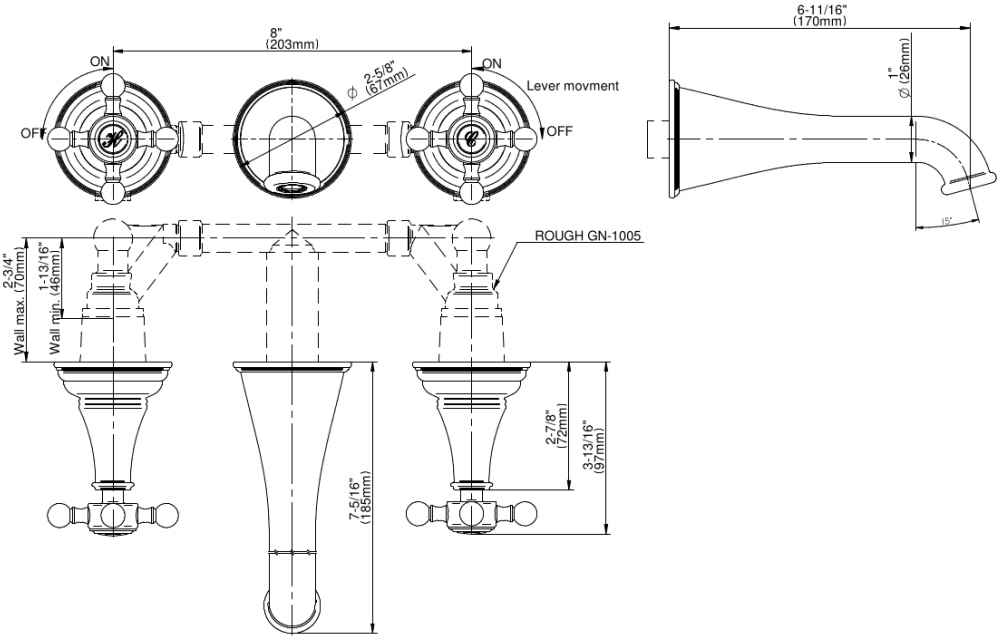
Lauren Collection
G-2430-C21B-T
Lauren Wall-Mounted Lavatory Faucet