G-8703
Vignola Wall Supply Elbow

Product Features

- 1/2" NPT female thread inlet

Available Finishes

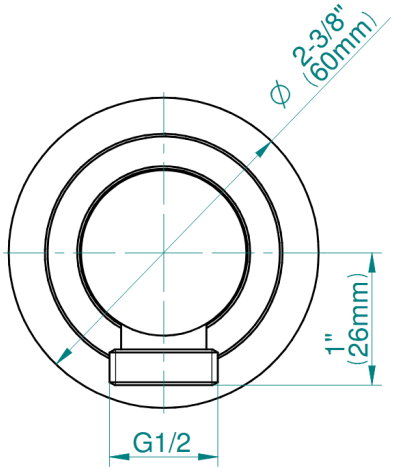

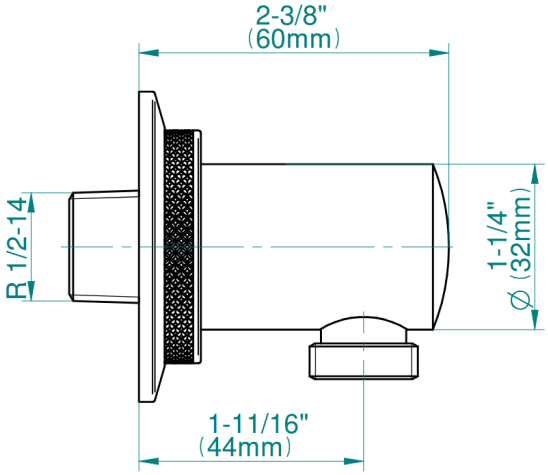

The measurements shown are for reference only. Products and specifications shown are subject to change without notice. Revised 09/2023