Vignola Collection
G-11650-LM60B-T
Vignola Roman Tub (Trim)

Product Features

- Matching deck-mounted handshower and diverter set available
- Please note to specify the handle insert and finish option R3 or R4
- To complete package, you must order Rough Valve

Available Finishes
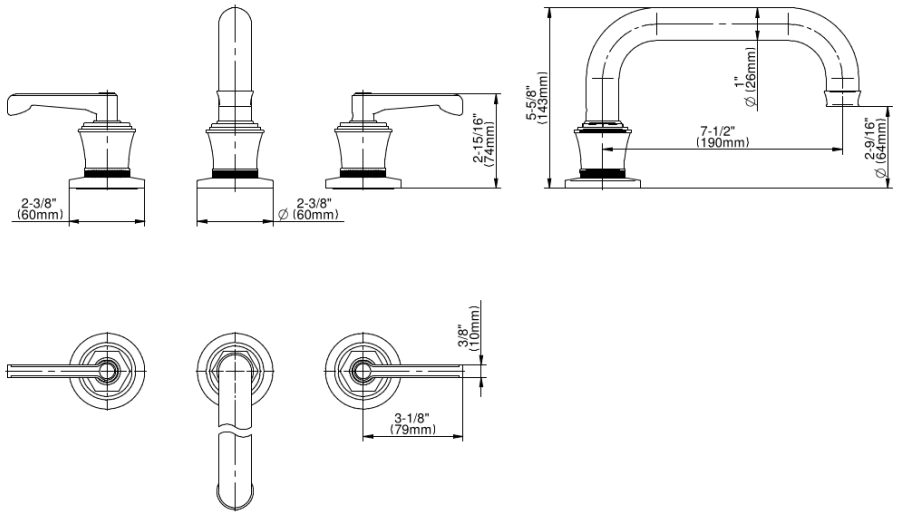
Vignola Collection
G-11650-LM60B-T
Vignola Roman Tub (Trim)