Bali Collection
G-8038-LM21E1-T
Bali M-Series 2-Way Diverter Valve Trim with Handle

Product Features

- Single metal handle
- Decorative trim plate
- Use with G-8052 2-Way Diverter Volume Control Valve WITH Off Function and Pass-Through

Code compliance

- ADA

Available Finishes
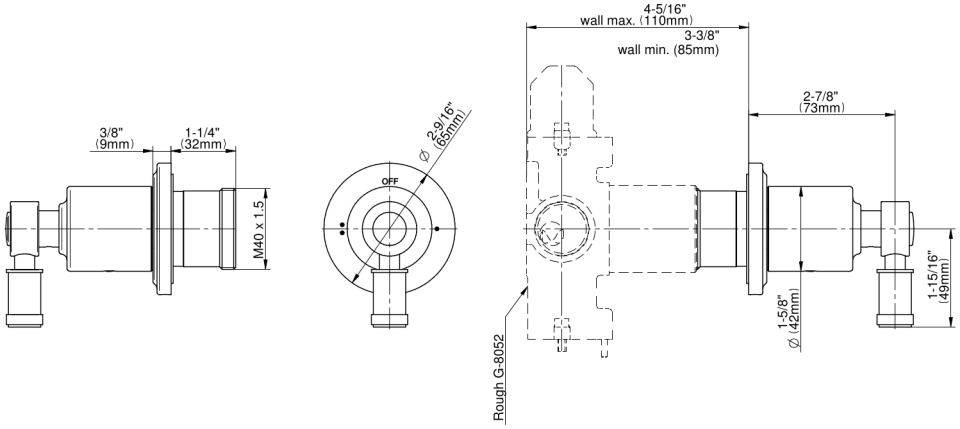
Bali Collection
G-8038-LM21E1-T
Bali M-Series 2-Way Diverter Valve Trim with Handle