Bali Collection
G-7015-LM21B-T
Bali Trim Plate w/Handle

Product Features

- Single metal lever handle
- Decorative trim plate
- Use with G-7005 Pressure Balancing Rough Valve

Code compliance

- ADA

Available Finishes
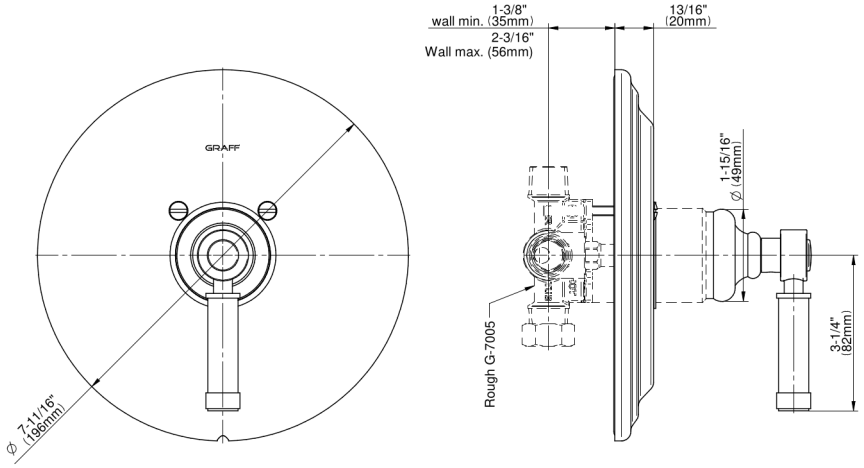
Bali Collection
G-7015-LM21B-T
Bali Trim Plate w/Handle