Bali Collection
G-2106-LM21M
Bali Vessel Lavatory Faucet

Product Features

- Single-hole Installation
- Aerated flow rate ? 1.2 max gpm
- 1-3/8" Hole Cutout
- Drain assembly not included
- Optional Matching Decorative Trap G-9973

Code compliance

- ADA
- CALGreen

Available Finishes
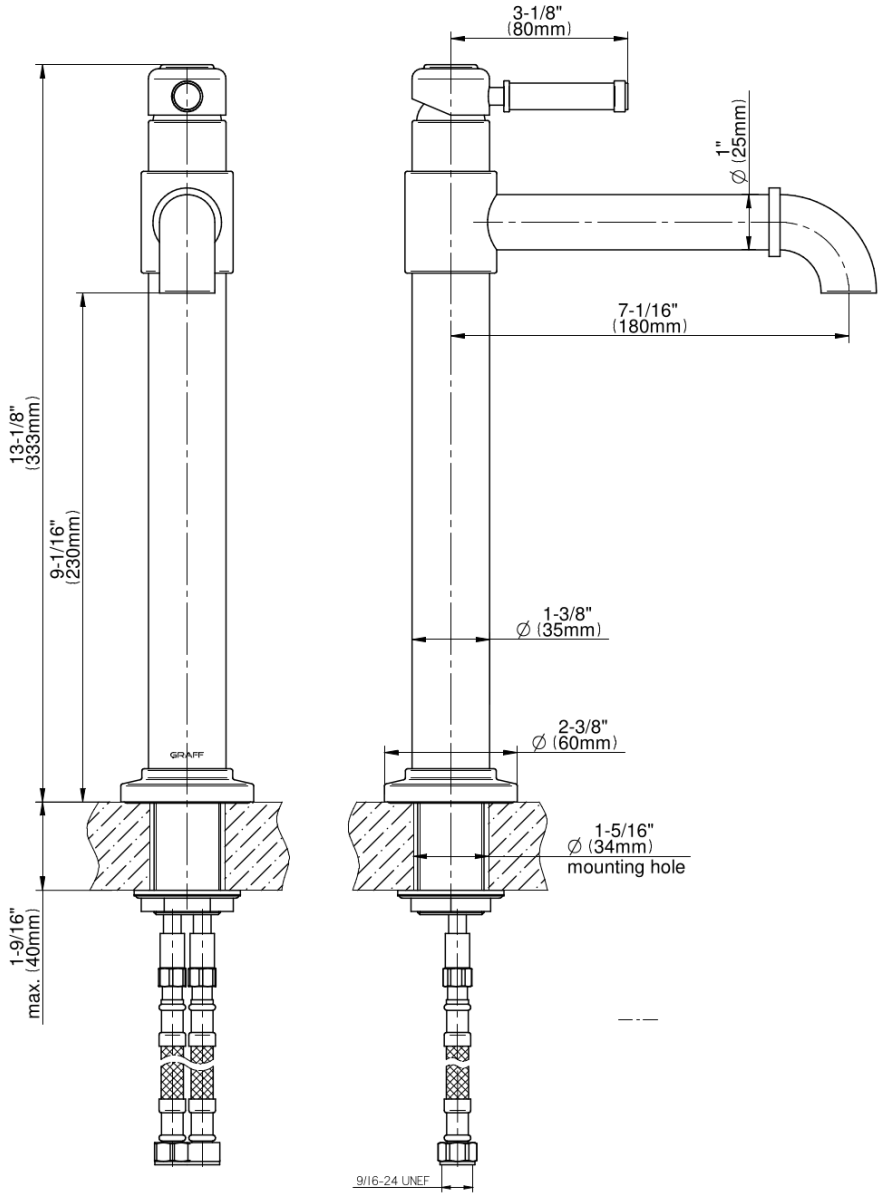
Bali Collection
G-2106-LM21M
Bali Vessel Lavatory Faucet