Adley Collection
G-3800-LM15
Adley Widespread Bridge Lavatory Faucet

Product Features

- Installs on 8
- Swivel spout
- Aerated flow rate ? 1.2 max gpm
- Includes pop-up drain assembly with lift rod and overflow
- Optional matching decorative trap G-9973

Code compliance

- ADA
- CALGreen

Available Finishes
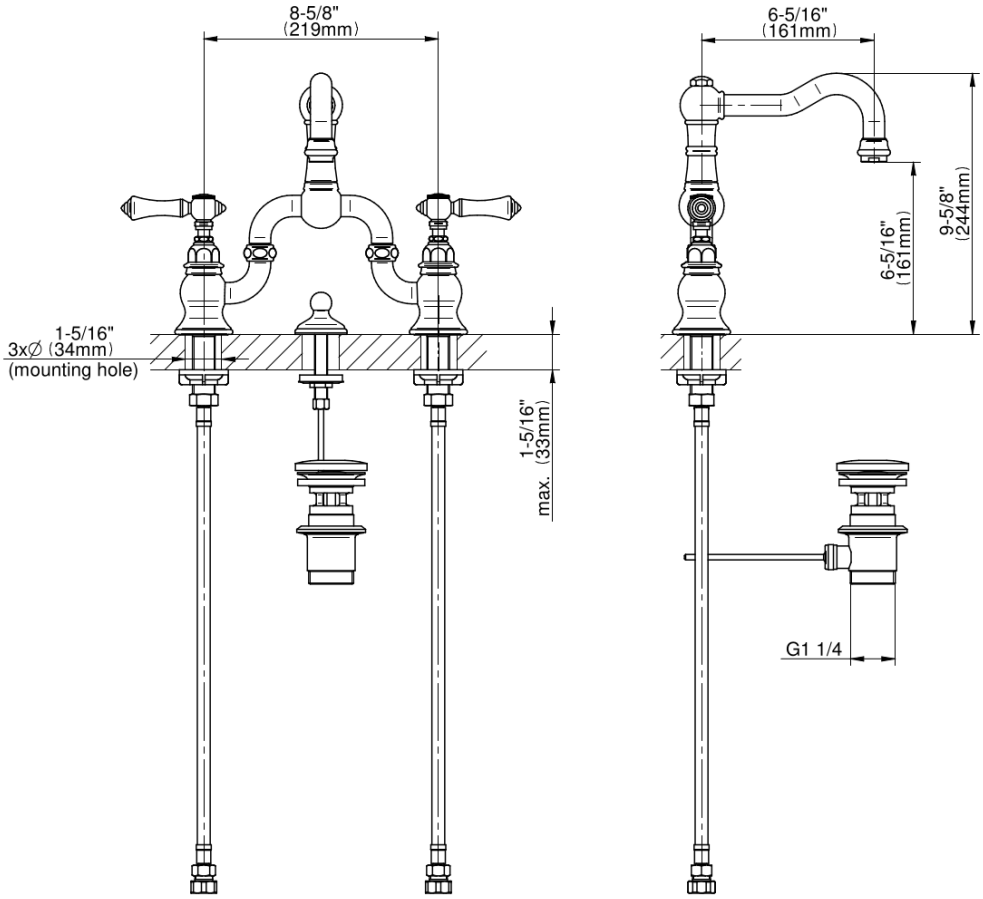
Adley Collection
G-3800-LM15
Adley Widespread Bridge Lavatory Faucet