G-8048-C17E0-T
Square M-Series Valve Trim with Two Handles

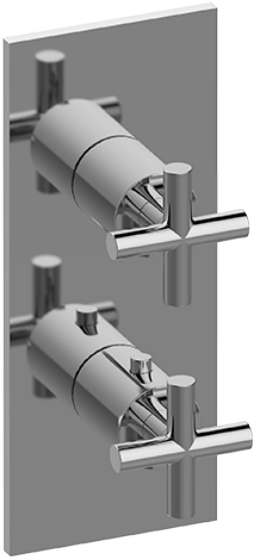

Product Features

- Two metal handles
- Decorative trim plate
- To complete package, you must order G-8006 Rough Valve + 1 other Rough Valve

Available Finishes
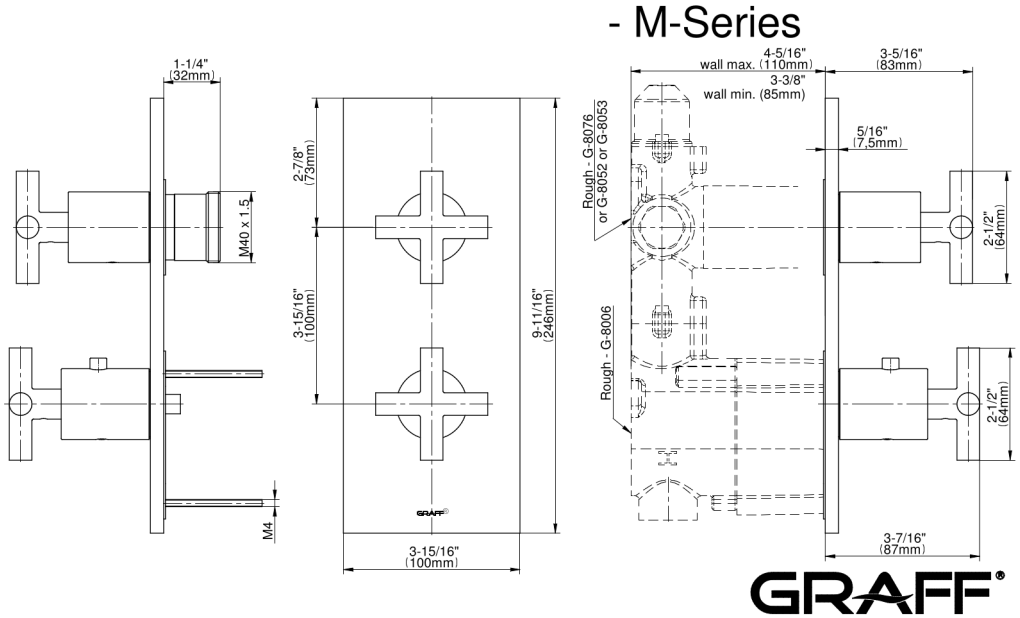
G-8048-C17E0-T
Square M-Series Valve Trim with Two Handles