Luna Collection
G-0035-LM36W-T
Luna Lavatory Single Handle Set - Wall-Mounted

Product Features

- Requires G-1080 rough

Available Finishes
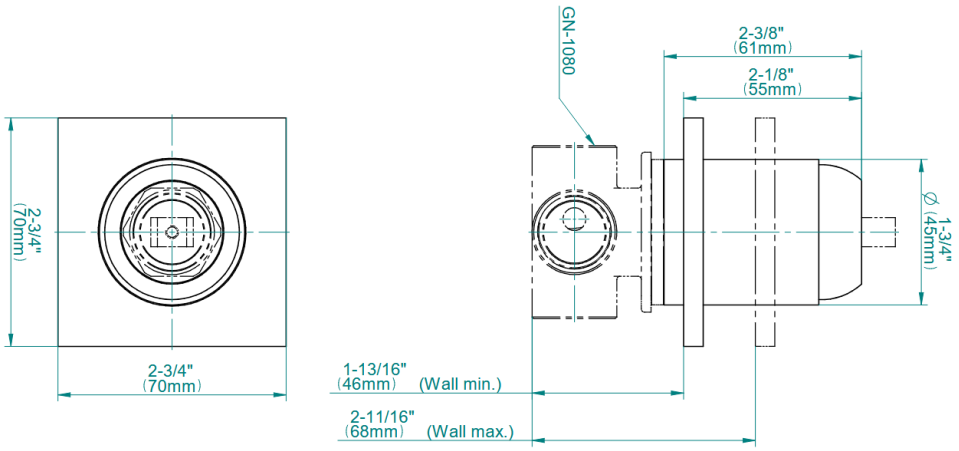
Luna Collection
G-0035-LM36W-T
Luna Lavatory Single Handle Set - Wall-Mounted