Phase Collection
G-7080-LM45S-T
Phase Pressure Balancing Valve Trim with Handle and Diverter

Product Features

- Single metal handle, decorative trim plate
- Decorative trim plate
- Includes push-button diverter
- Use with G-7055 Pressure Balancing Rough Valve

Code compliance

- ADA

Available Finishes
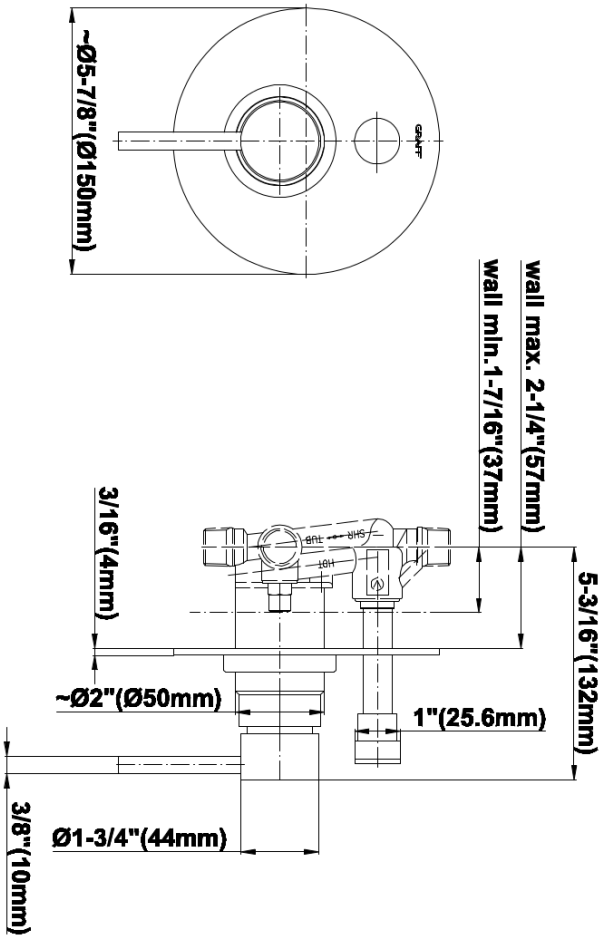
Phase Collection
G-7080-LM45S-T
Phase Pressure Balancing Valve Trim with Handle and Diverter