MOD+ Collection
G-11521
MOD+ Two-Hole Lavatory Faucet

Product Features

- Two-hole installation
- Aerated flow rate ?1.2 max gpm
- 1-3/8" hole cutout (x2)
- Drain assembly not included
- Optional matching decorative trap G-9970

Code compliance

- CALGreen

Available Finishes
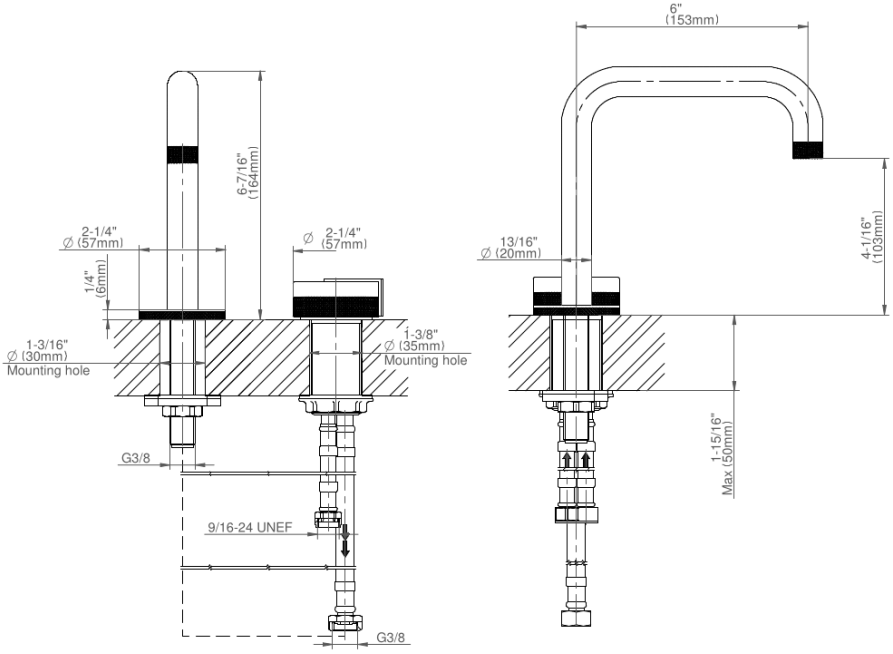
MOD+ Collection
G-11521
MOD+ Two-Hole Lavatory Faucet