Bali Collection
G-7015-LM20S-T
Bali Trim Plate w/Handle

Product Features

- Single metal lever handle
- Decorative trim plate
- Use with G-7005 pressure balancing rough valve for shower-only configurations
- To complete package, you must order rough valve

Code compliance

- ADA

Available Finishes
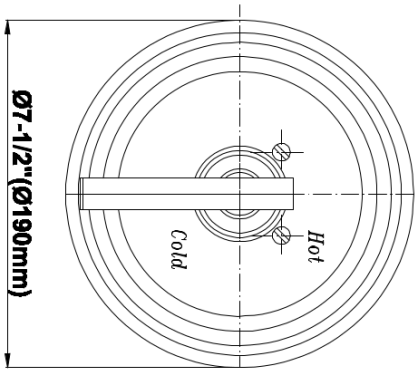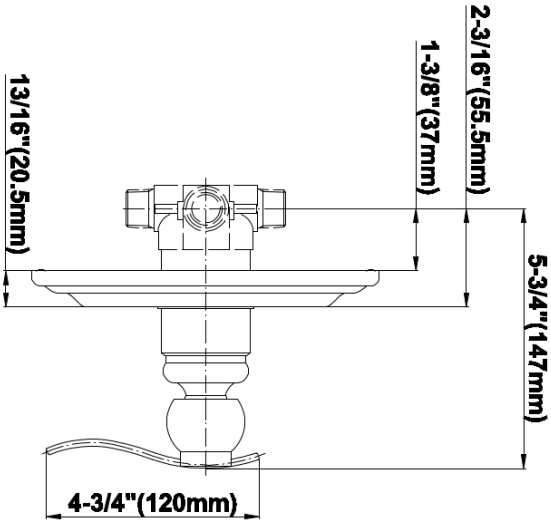
Bali Collection
G-7015-LM20S-T
Bali Trim Plate w/Handle