Vintage Collection
G-8031-LM56E-T
Vintage M-Series Thermostatic Valve Trim with Handle

Product Features

- Single metal handle
- Decorative trim plate
- Use with G-8006 Thermostatic Rough Valve
- To complete package, you must order Rough Valve

Code compliance

- ADA

Available Finishes

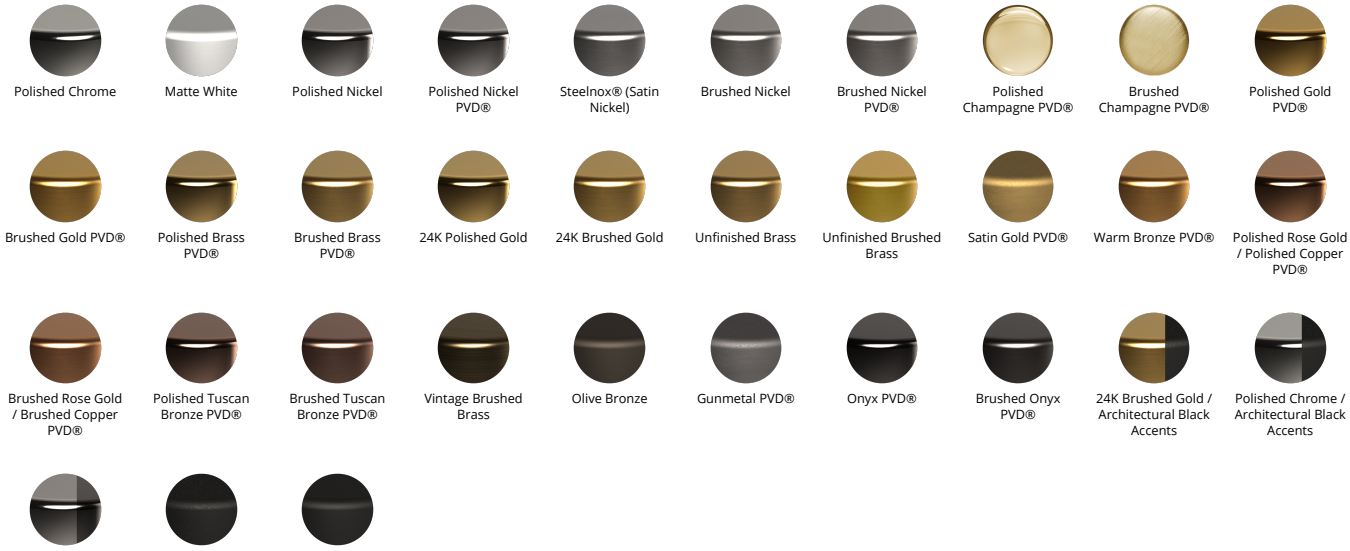

Vintage Collection
G-8031-LM56E-T
Vintage M-Series Thermostatic Valve Trim with Handle

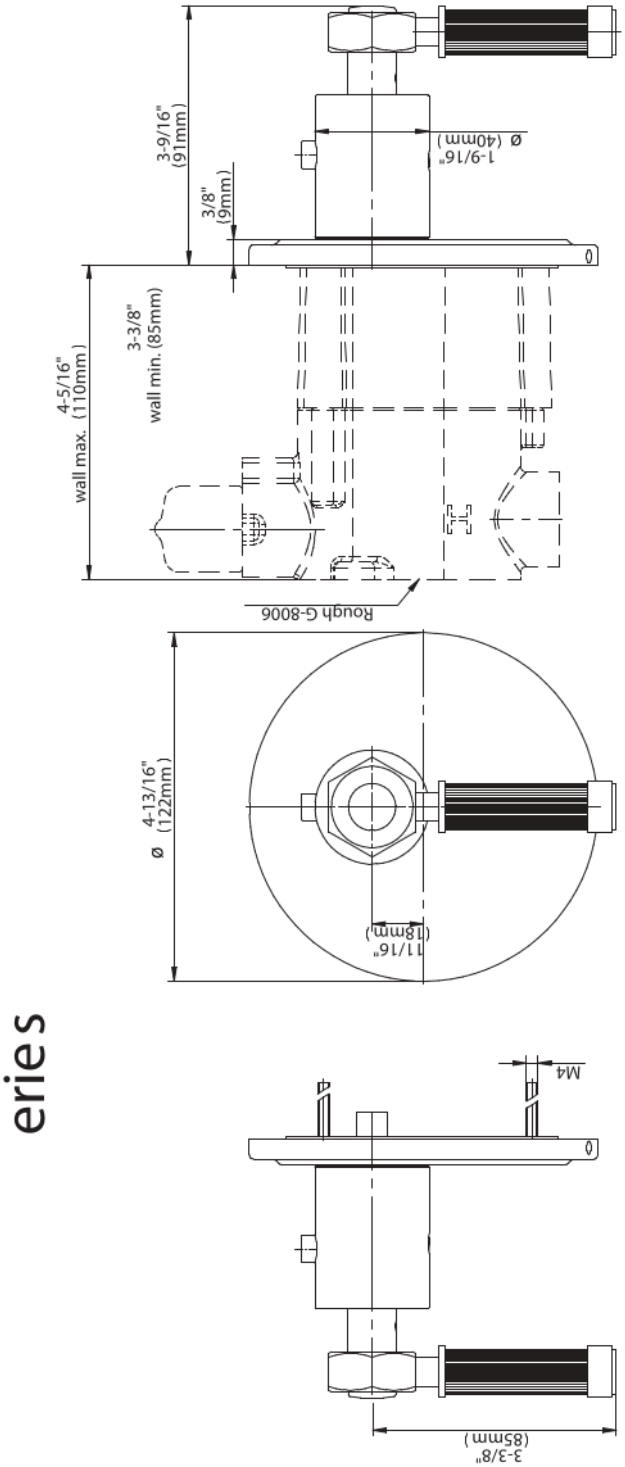

eries