Adley Collection
G-8039-C2E1-T
Adley M-Series 3-Way Diverter Valve Trim with Handle

Product Features

- Single metal handle and decorative trim plate
- Use with G-8053 3-Way Diverter Control Valve WITH Off Function

Available Finishes
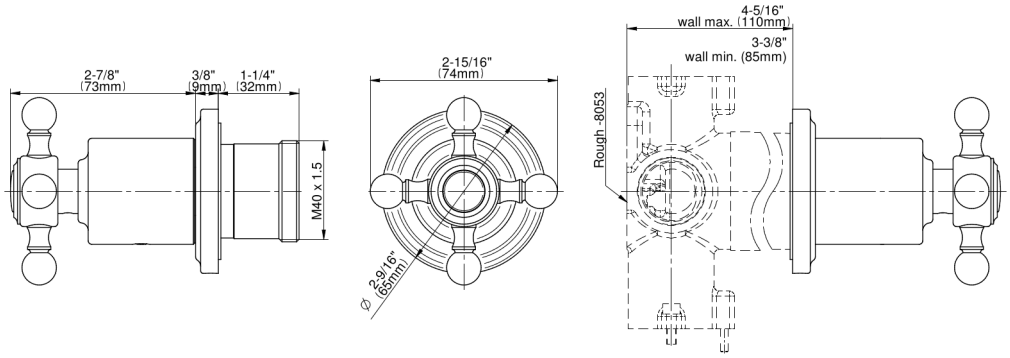
Adley Collection
G-8039-C2E1-T
Adley M-Series 3-Way Diverter Valve Trim with Handle