Harley Collection
G-8069-LM57E1-T
Harley M-Series 3-Way Diverter Valve Trim with Handle

Product Features

- Single metal handle
- Decorative trim plate
- Use with G-8053 3-Way Diverter Control Valve WITH Off Function

Code compliance

- ADA

Available Finishes

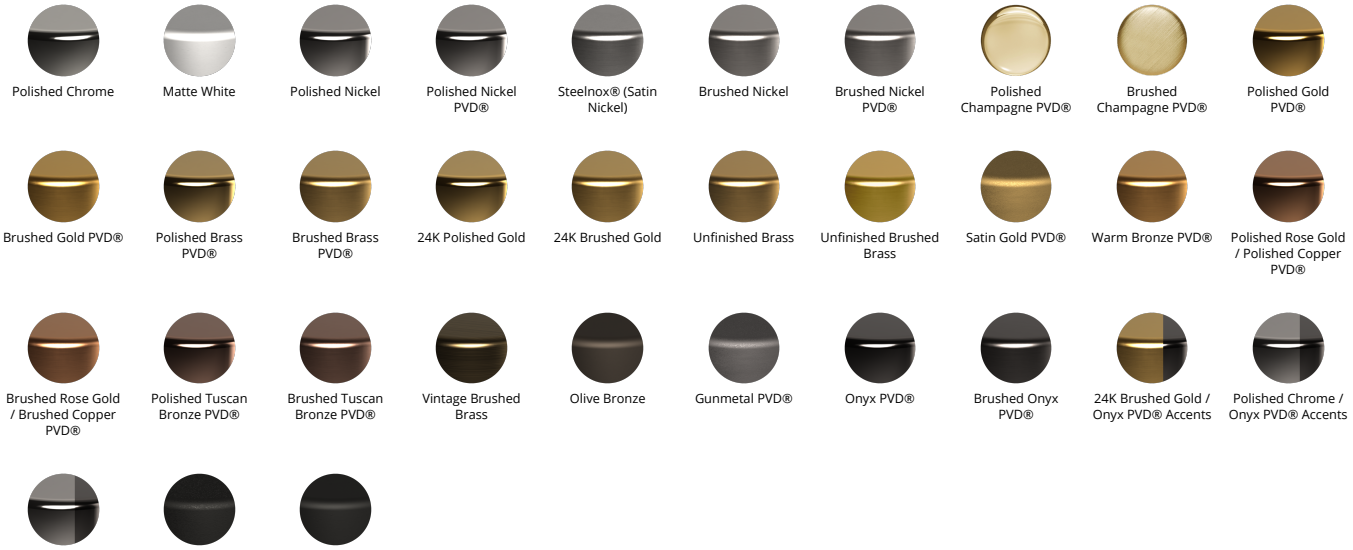
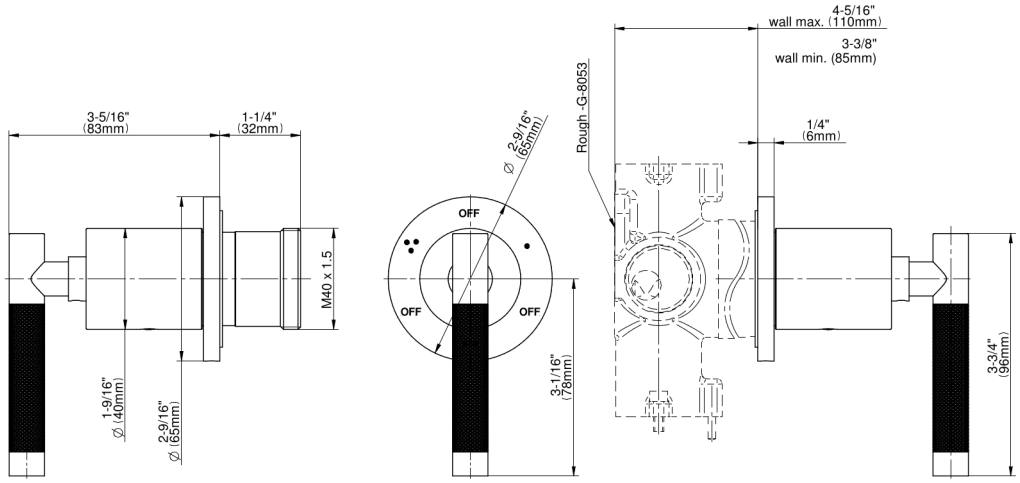
Harley Collection
G-8069-LM57E1-T
Harley M-Series 3-Way Diverter Valve Trim with Handle