Harley Collection
**G-6751-LM57B**
Harley Roman Tub Set

## Product Features

- Aerated flow rate 13 gpm @60 psi
- Handshower flow rate ?1.5 max gpm
- Deck-mounted handshower and diverter set included
- Optional in-line pressure balancing valve

## Code compliance

- ADA

## Available Finishes

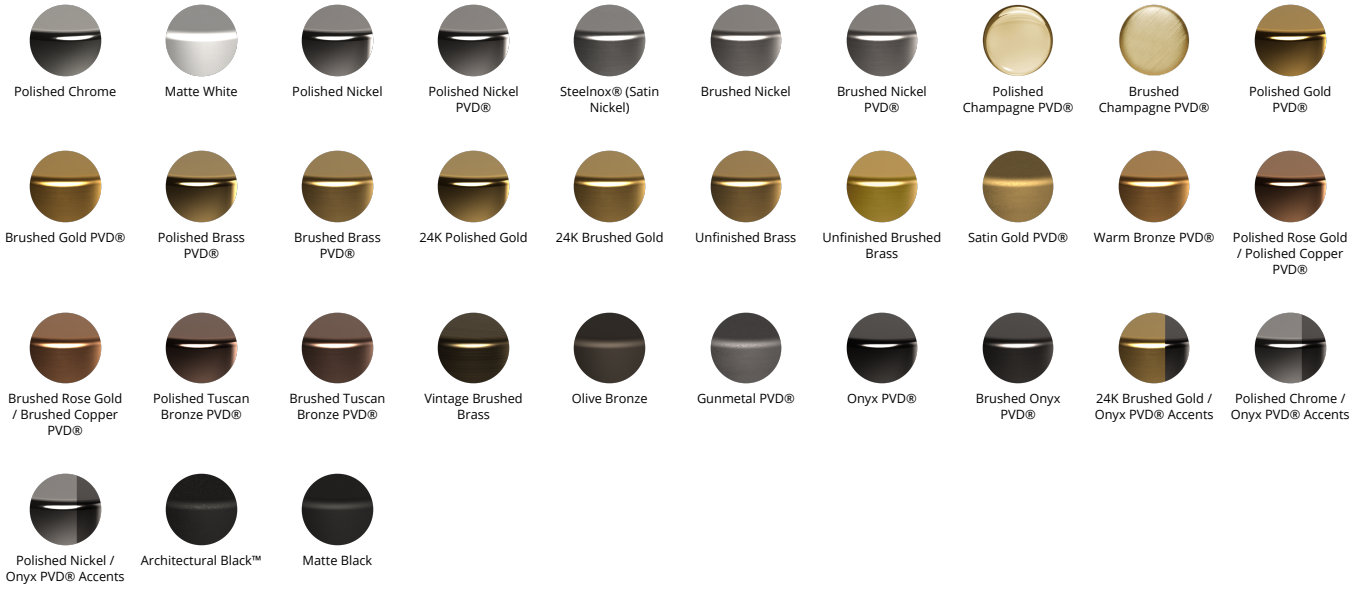
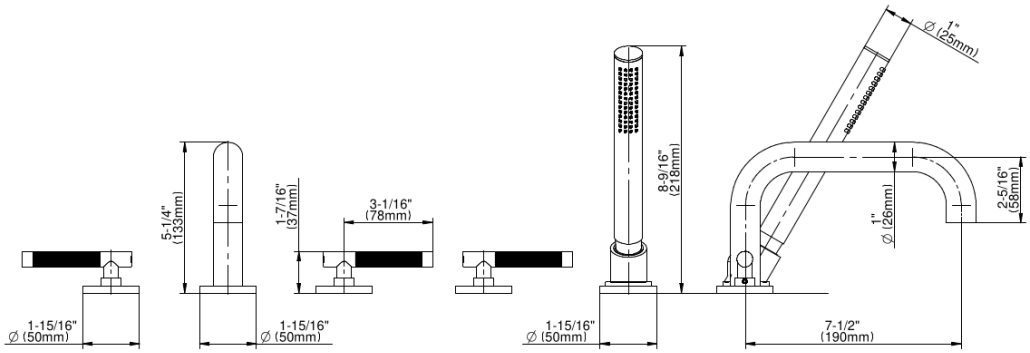
Harley Collection
**G-6751-LM57B**
Harley Roman Tub Set