Vintage Collection
G-8086-LM56C18-T
Vintage M-Series Valve Trim with Two Handles

Product Features

- Two metal handles
- Decorative trim plate
- Use with M-Series rough valves

Available Finishes

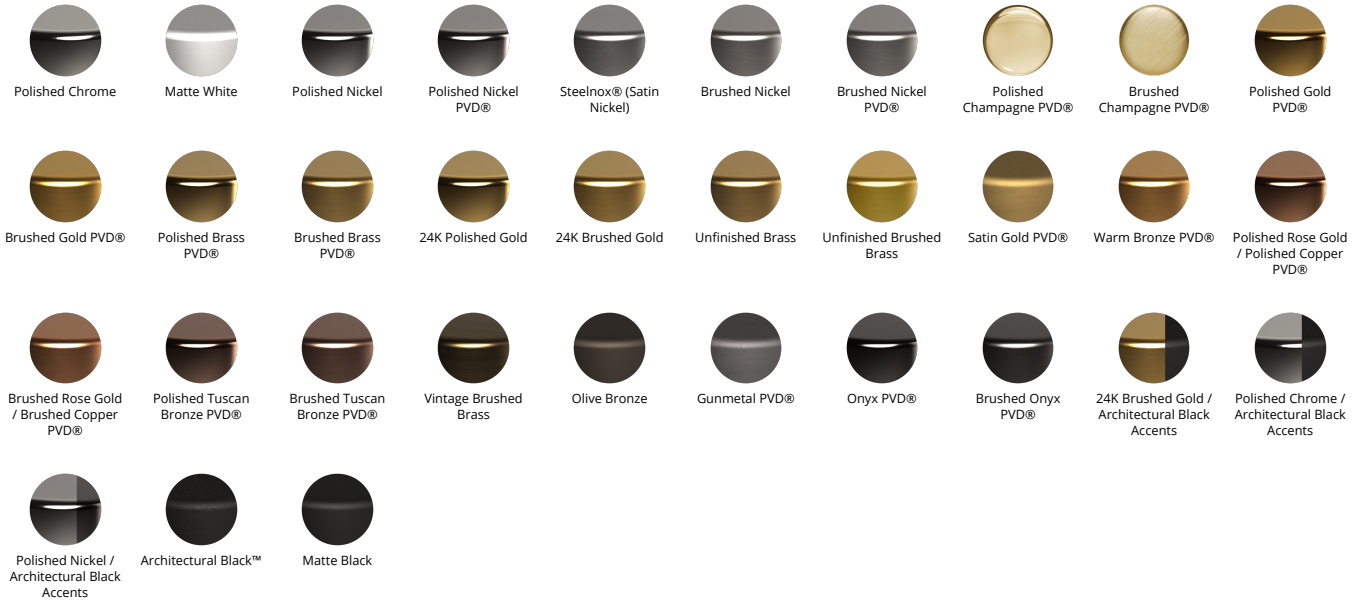
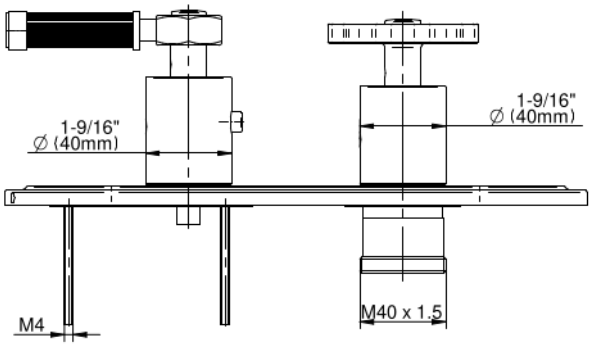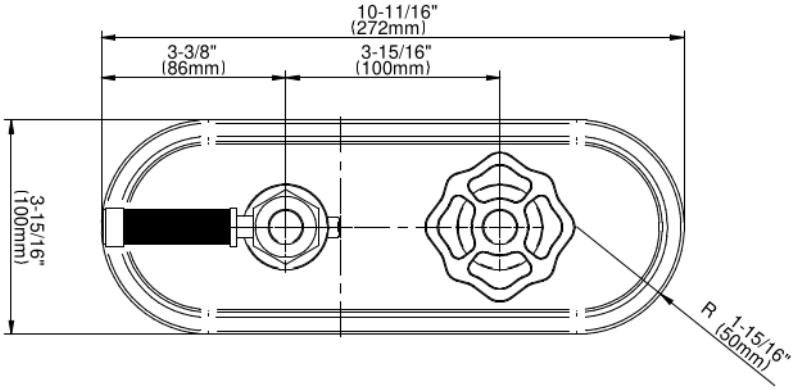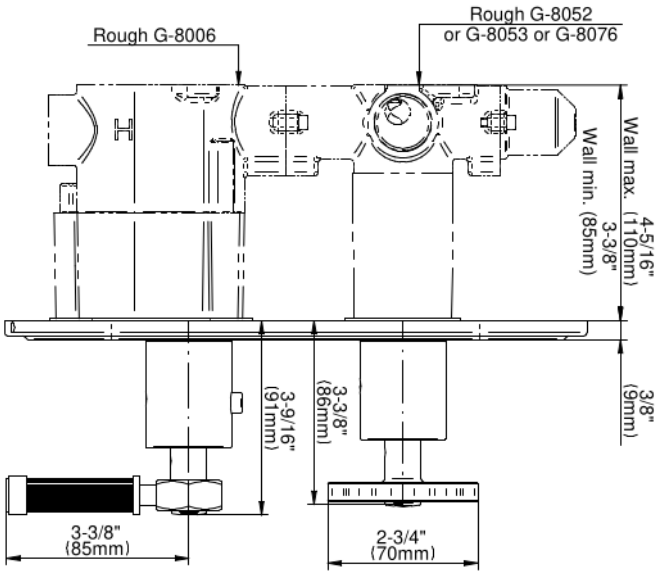
Vintage Collection
G-8086-LM56C18-T
Vintage M-Series Valve Trim with Two Handles