Vintage Collection
G-8038-C18E1-T
Vintage M-Series 2-Way Diverter Valve Trim with Handle

Product Features

- Single metal handle
- Decorative trim plate
- Use with G-8052 2-Way Diverter Volume Control Valve WITH Off Function and Pass-Through

Available Finishes

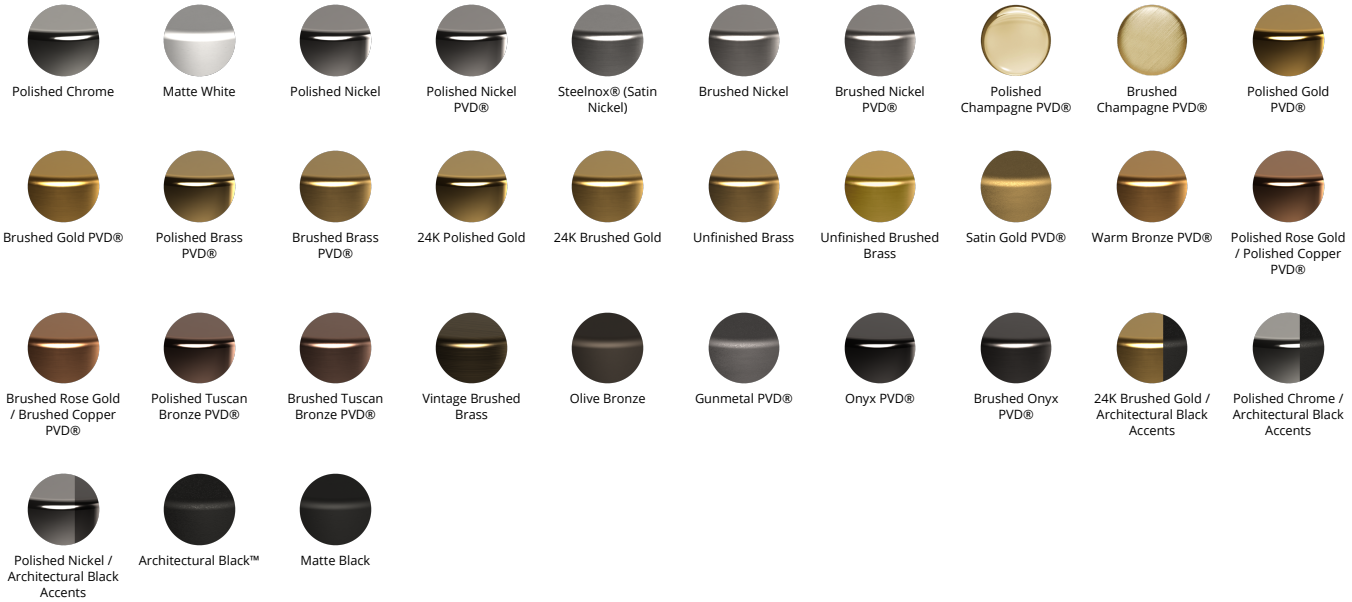
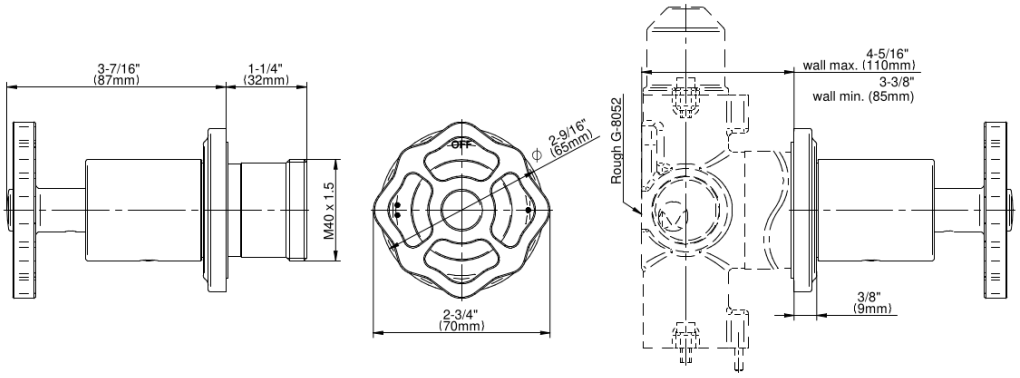
Vintage Collection
G-8038-C18E1-T
Vintage M-Series 2-Way Diverter Valve Trim with Handle