Vintage Collection
G-8034-C18E1-T
Vintage M-Series Stop/Volume Control Valve Trim with Handle

Product Features

- Single metal handle
- Decorative trim plate
- Use with G-8076 Stop/Volume Control rough valve with Pass-Through or G-8077 Stop/Volume Control rough valve

Available Finishes

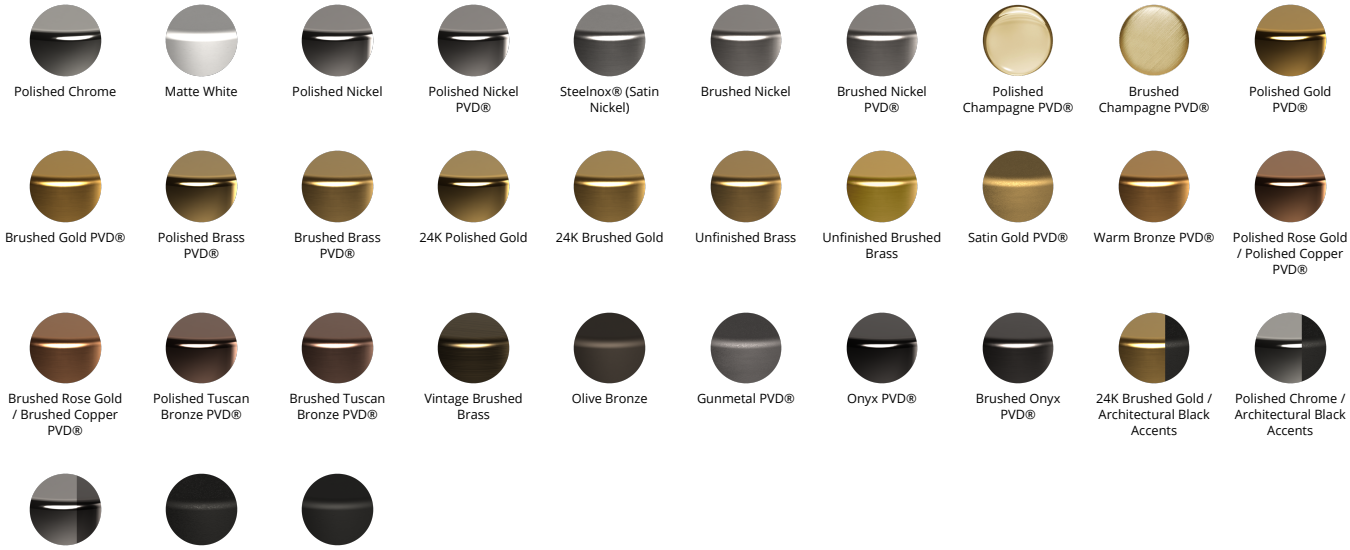
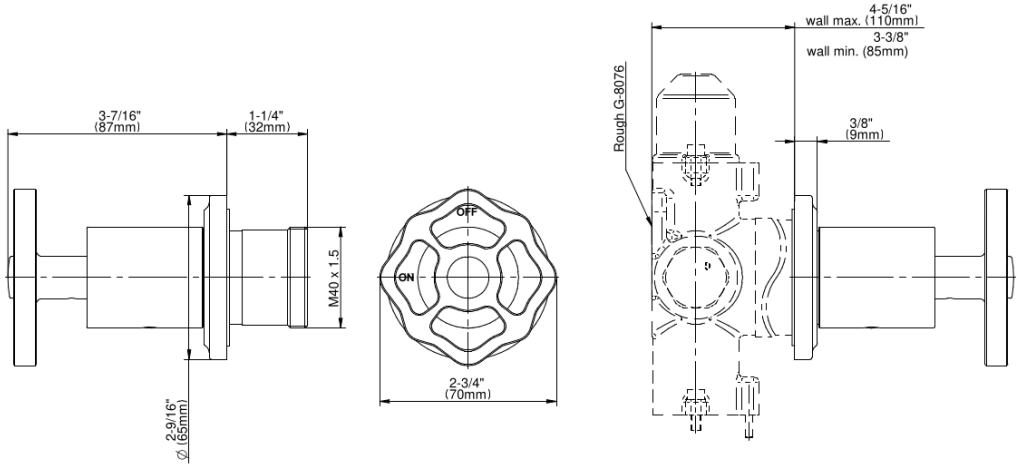
Vintage Collection
G-8034-C18E1-T
Vintage M-Series Stop/Volume Control Valve Trim with Handle