Harley Collection
G-19208
Towel Ring

Available Finishes
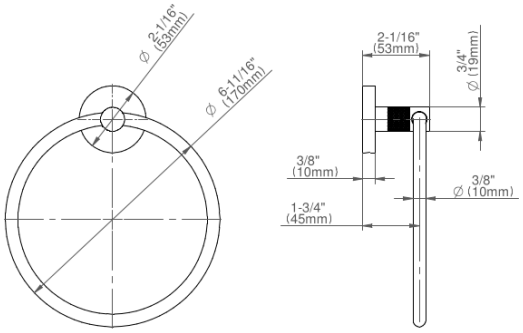
Harley Collection
G-19208
Towel Ring