Harley Collection
G-6156-C19B-T
Harley Deck-Mounted Handshower and Diverter Set (Trim)

Product Features

- Matches G-6750-*** Roman tub set
- Handshower hose included

Available Finishes

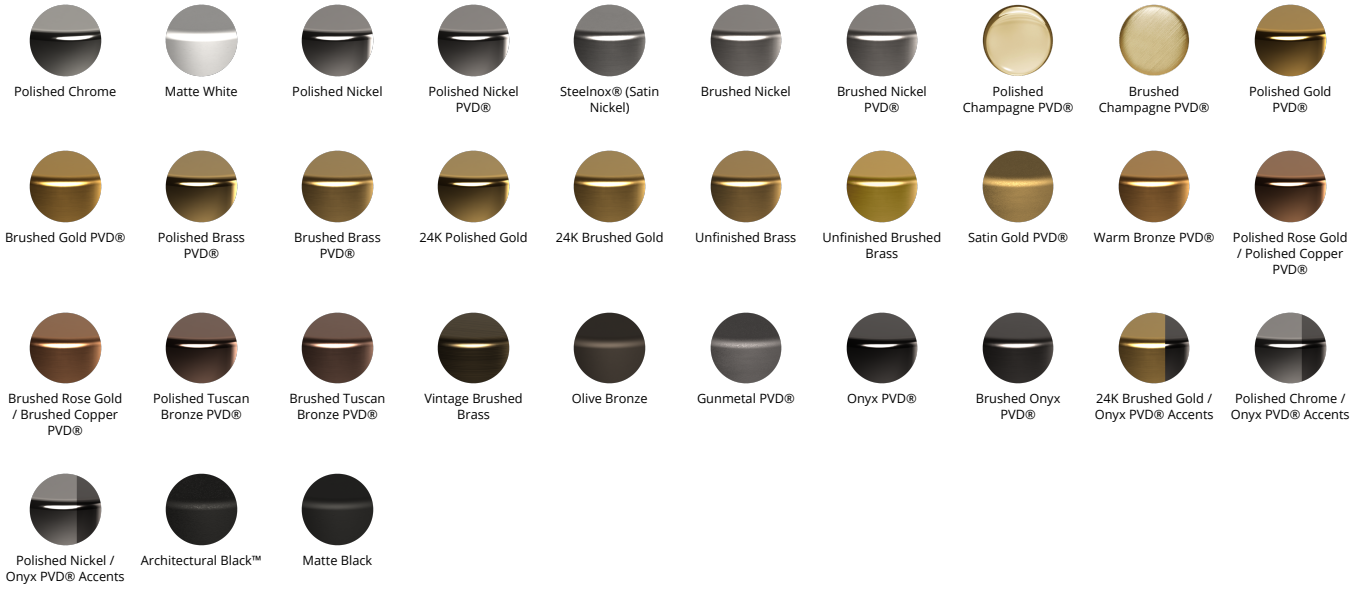

Harley Collection
G-6156-C19B-T
Harley Deck-Mounted Handshower and Diverter Set
(Trim)

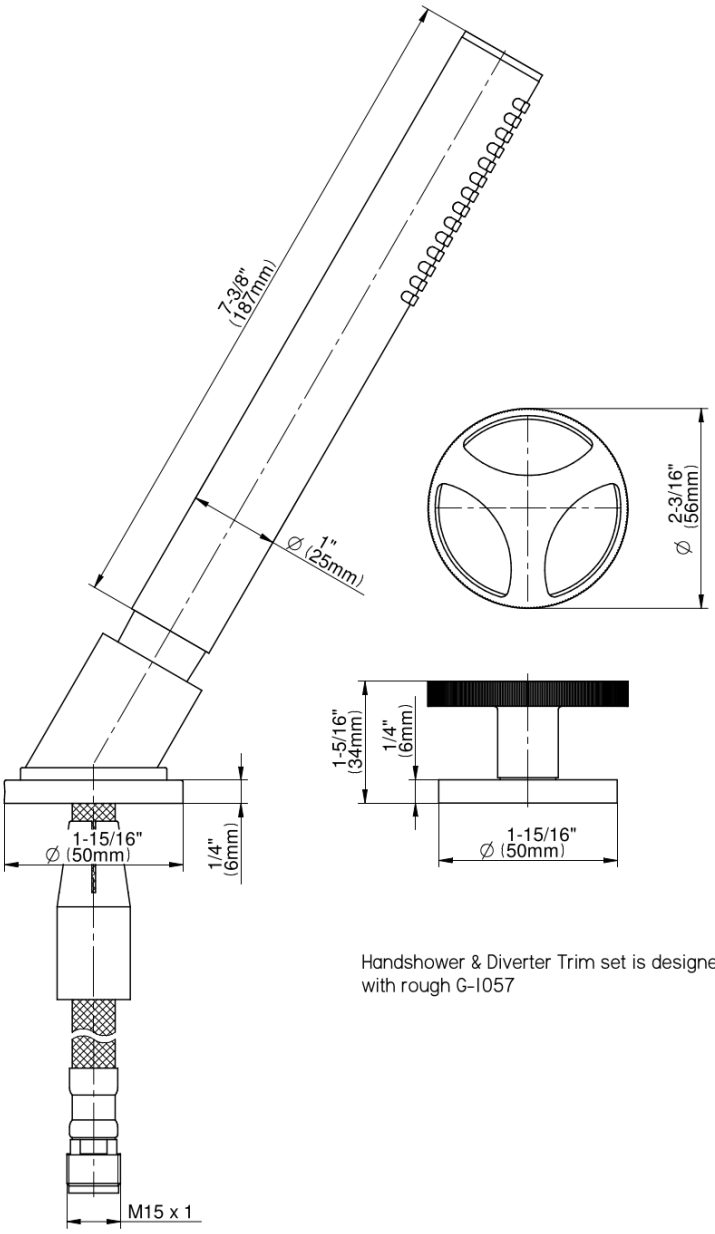

Handshower & Diverter Trim set is designed to operate
with rough G-1057