Vintage Collection
G-11320-C18B
Vintage Two-Hole Lavatory Faucet

Product Features

- Two-hole installation
- Aerated flow rate ? 1.2 max gpm
- 1-3/16" hole cutout (x2)
- Drain assembly not included
- Optional matching decorative trap G-9973

Code compliance

- CALGreen

Available Finishes

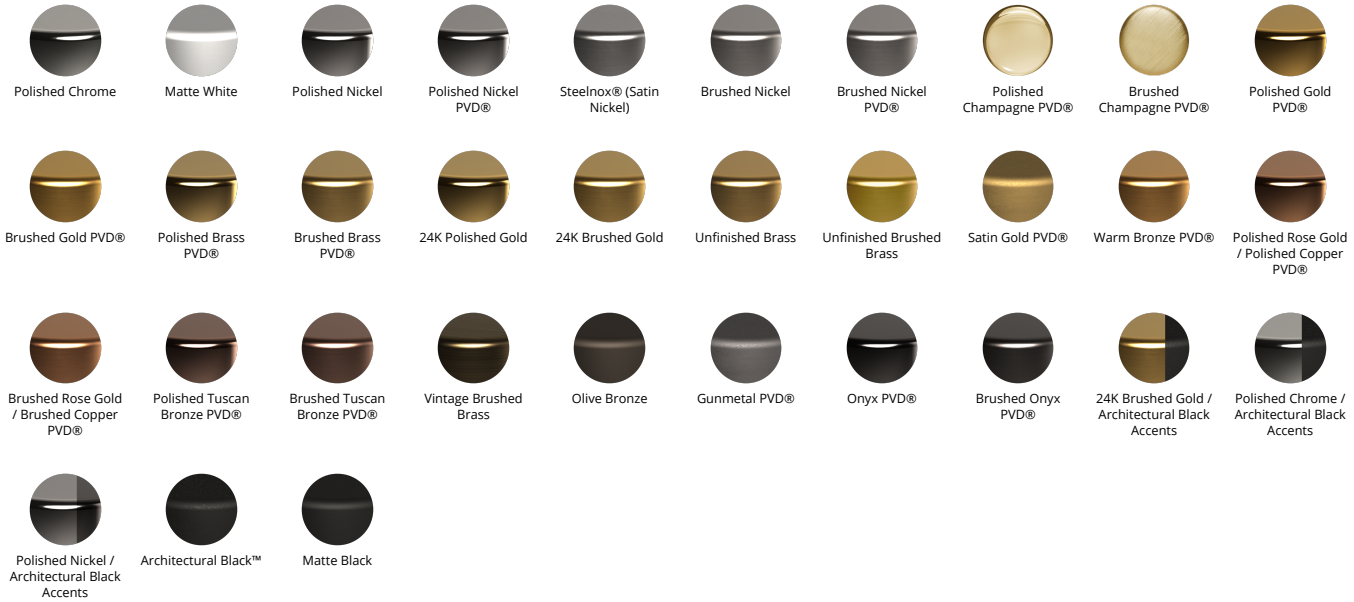
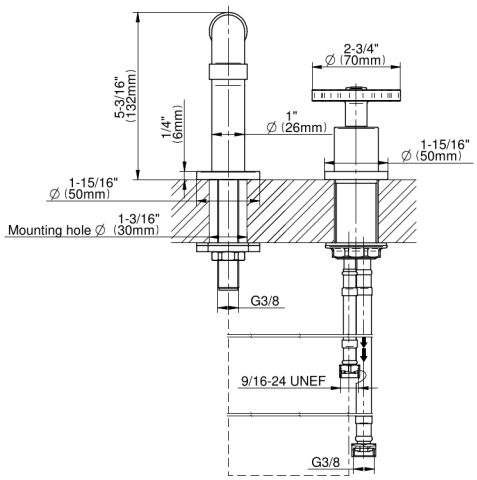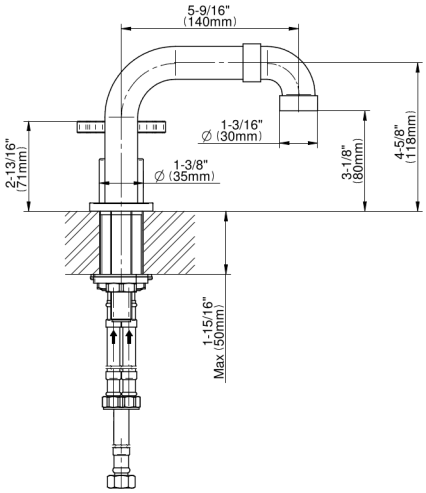
Vintage Collection
G-11320-C18B
Vintage Two-Hole Lavatory Faucet