Vintage Collection
G-11300-C18
Lavatory Faucet

Product Features

- Single-hole installation
- Aerated flow rate ? 1.2 max gpm
- 1-11/32” hole cutout
- Includes push-top umbrella pop-up drain with overflow
- Optional matching decorative trap G-9973

Code compliance

- CALGreen

Available Finishes

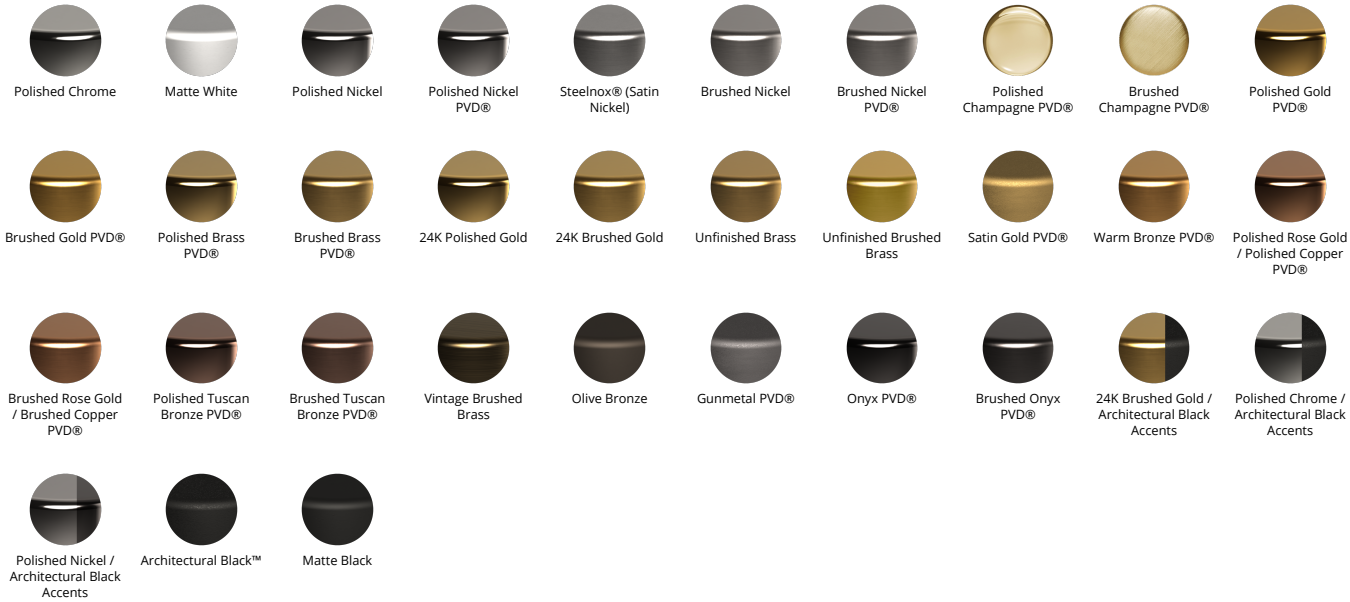
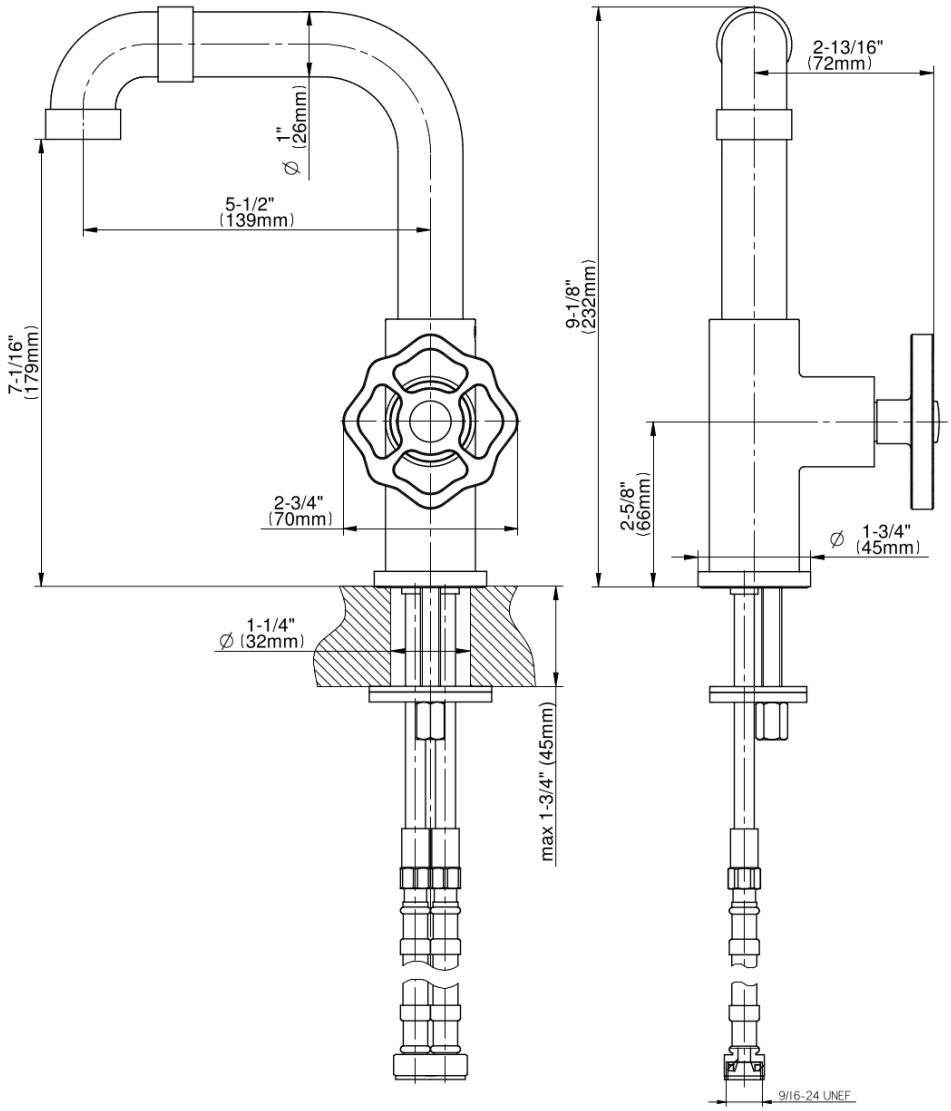
Vintage Collection
G-11300-C18
Lavatory Faucet