M.E. Collection
G-6109A-LM41M
M.E. Vessel Lavatory Faucet

Product Features

- Single-hole Installation
- Aerated flow rate ?1.2 max gpm
- Drain assembly not included
- Optional matching decorative trap G-9970

Code compliance

- ADA
- CALGreen

Available Finishes
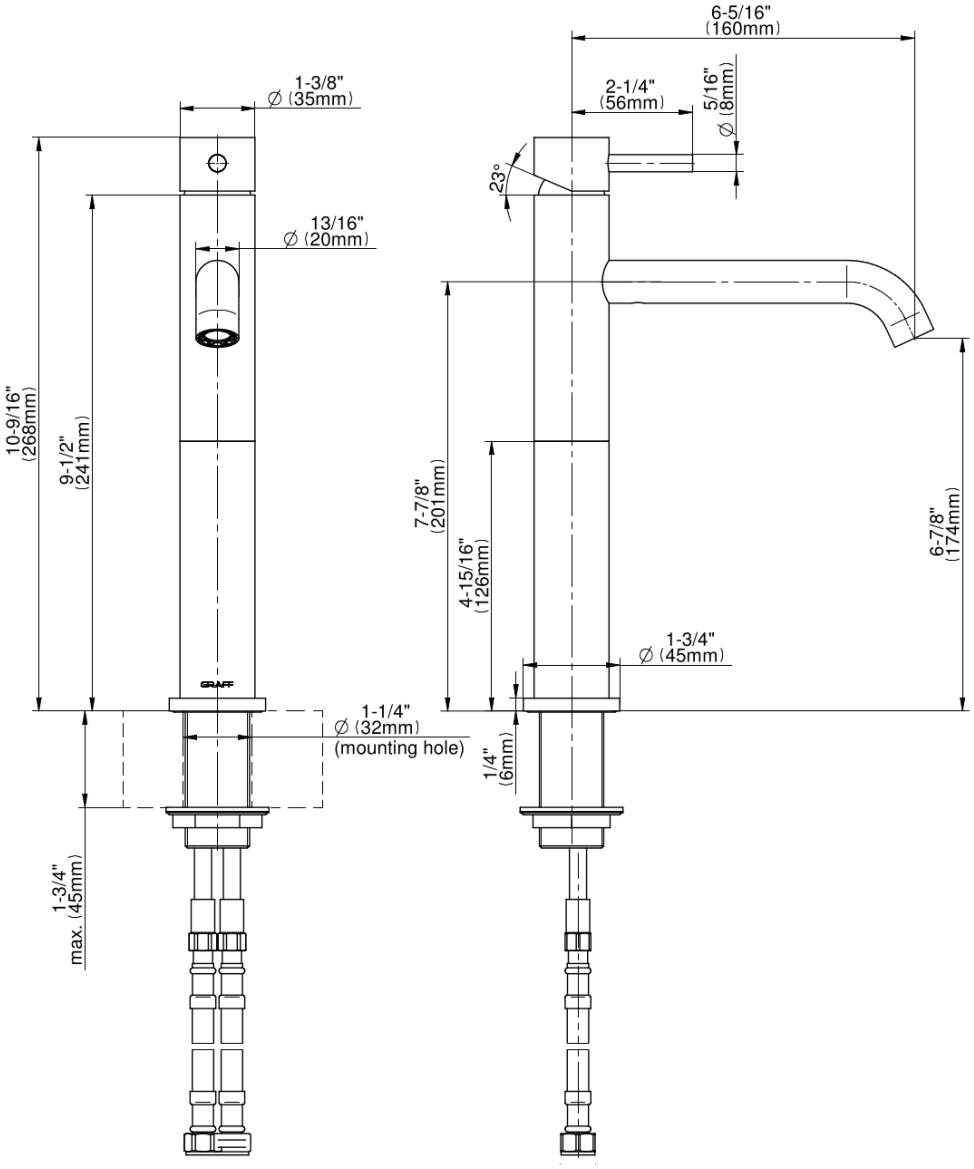
M.E. Collection
G-6109A-LM41M
M.E. Vessel Lavatory Faucet