Sinks and Bathtubs
G-9985
Pop-up bathtub drain with overflow

Available Finishes
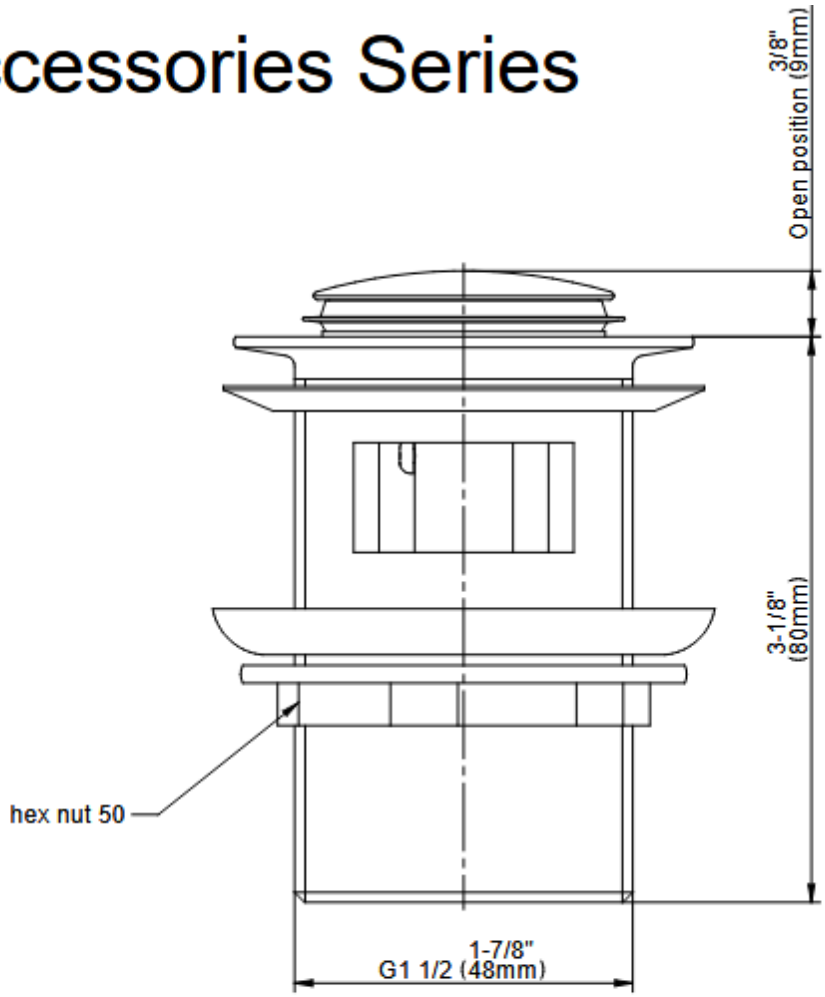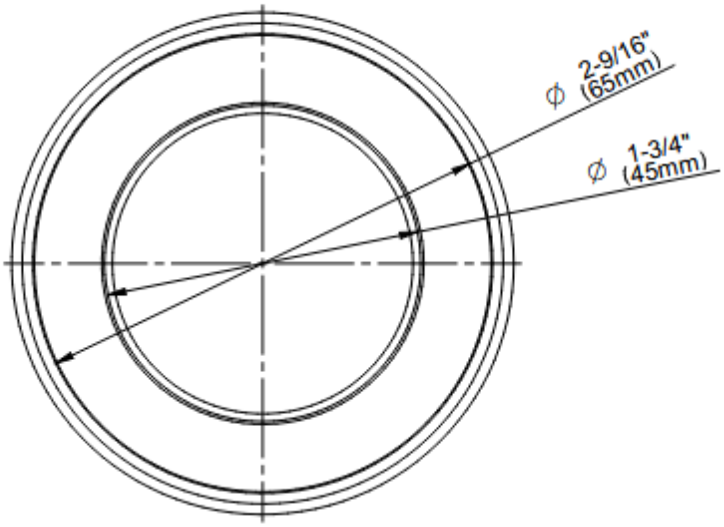
Accessories Series