Terra Collection
G-6751-C17B
Roman Tub Set (Rough and Trim)

Product Features

- Aerated flow rate 8 gpm @60 psi
- Handshower flow rate ?1.5 max gpm
- Deck-mounted handshower and diverter set included
- Optional in-line pressure balancing valve

Code compliance

- ADA

Available Finishes

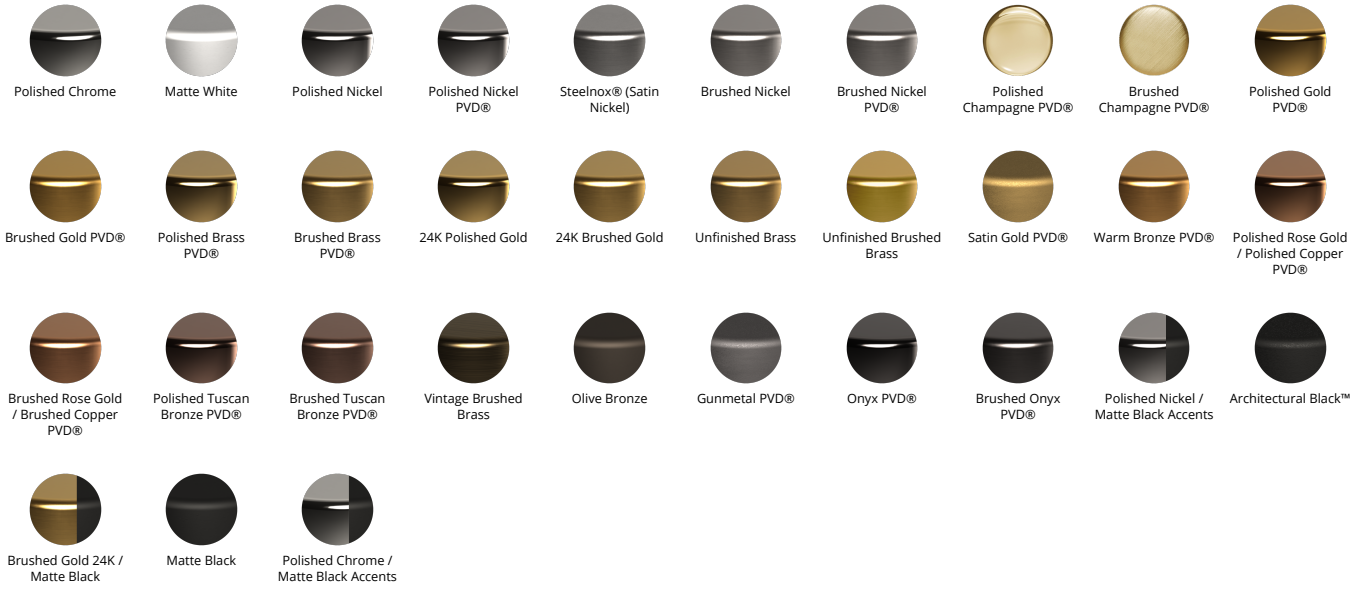
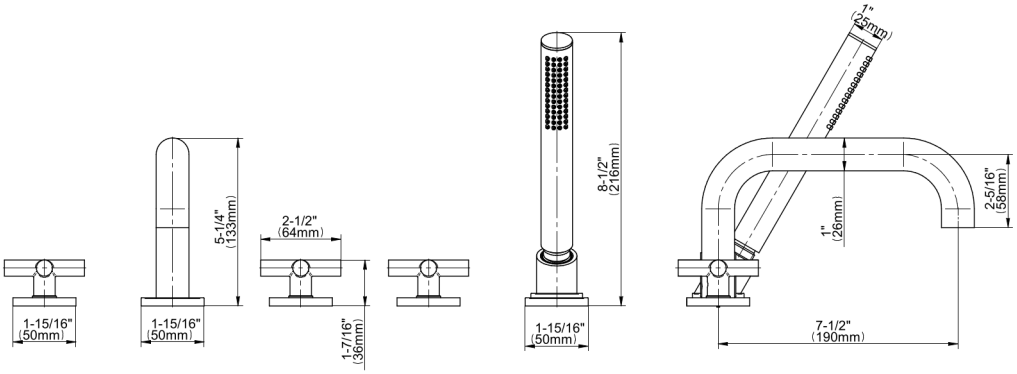
Terra Collection
G-6751-C17B
Roman Tub Set (Rough and Trim)