Adley Collection
G-8087-ALM15C2-T
Adley M-Series Valve Trim with Three Handles

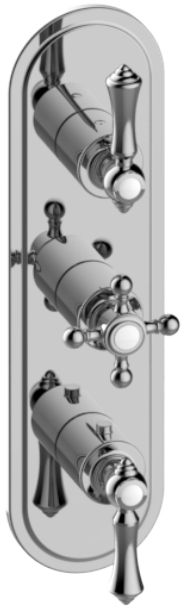

Product Features

- Three metal handles
- Decorative trim plate
- ALM15C2, ALM34C2, ALC1C2, ALM22C2, ALM48C16 and ALM56C18 handles should not be used with 3-outlet diverter valves
- To complete package, you must order rough valves

Available Finishes
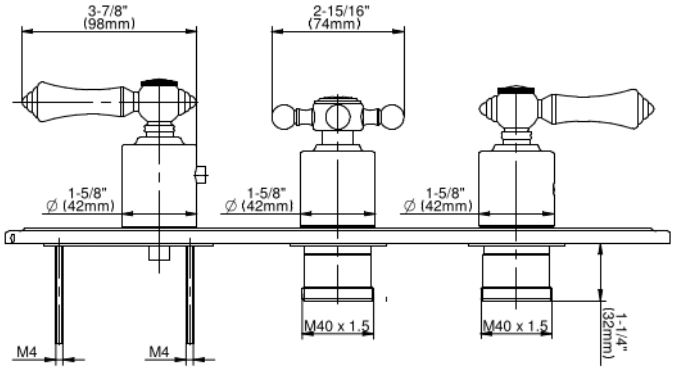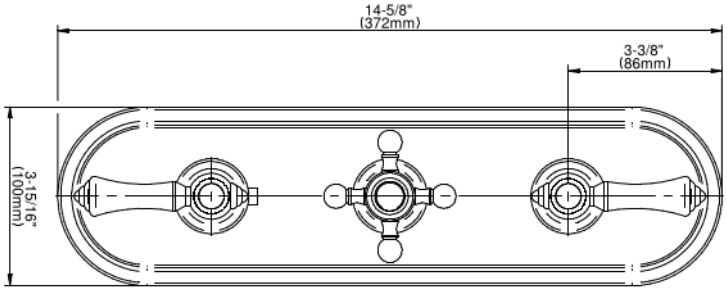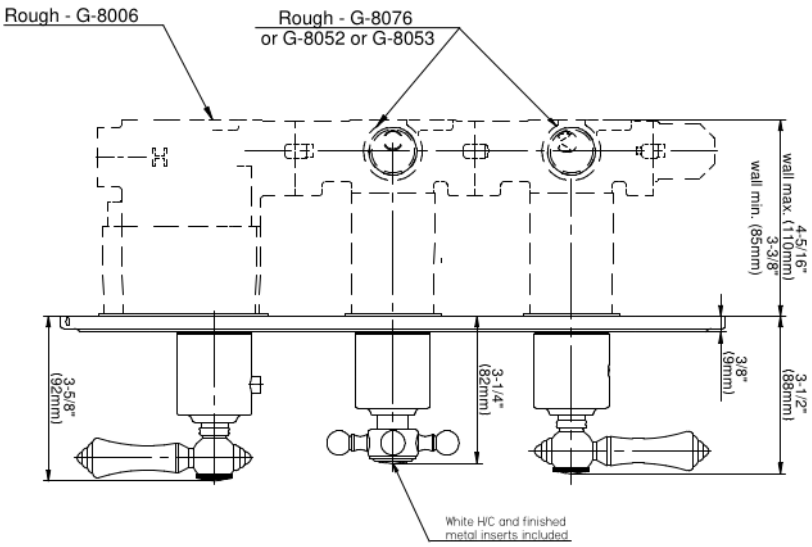
Adley Collection
G-8087-ALM15C2-T
Adley M-Series Valve Trim with Three Handles