Adley Collection
G-8086-LM15E0-T
Adley M-Series Valve Trim with Two Handles

Product Features

- Two metal handles
- Decorative trim plate
- Use with M-Series rough valves
- LM15E0, LM34E0 and LC1E0 handles should not be used with 3-way diverter valve

Code compliance

- ADA

Available Finishes
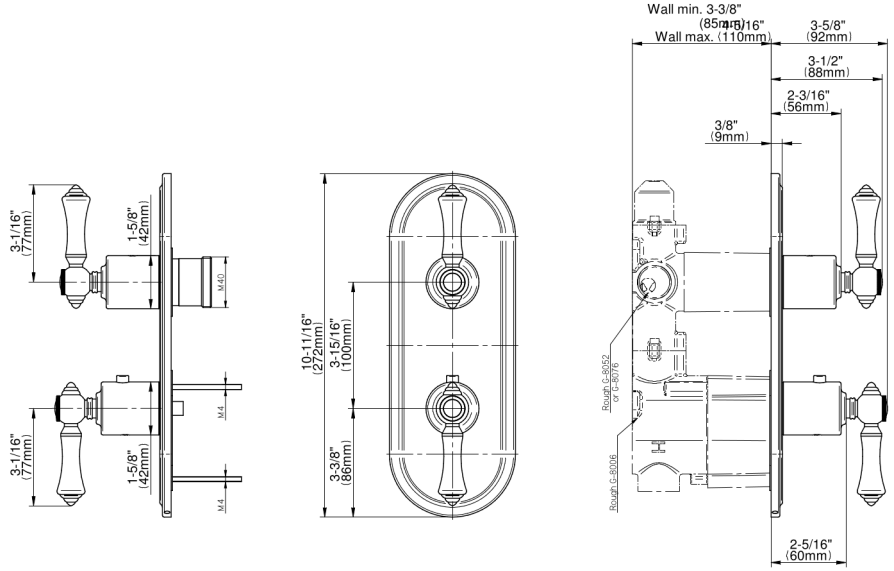
Adley Collection
G-8086-LM15E0-T
Adley M-Series Valve Trim with Two Handles