Adley Collection
G-8086-LM34C2-T
Adley M-Series Valve Trim with Two Handles

Product Features

- Two metal handles, decorative trim plate
- Use with M-Series rough valves
- LM15E0, LM34E0 and LC1E0 handles should not be used with 3-way diverter valve

Available Finishes
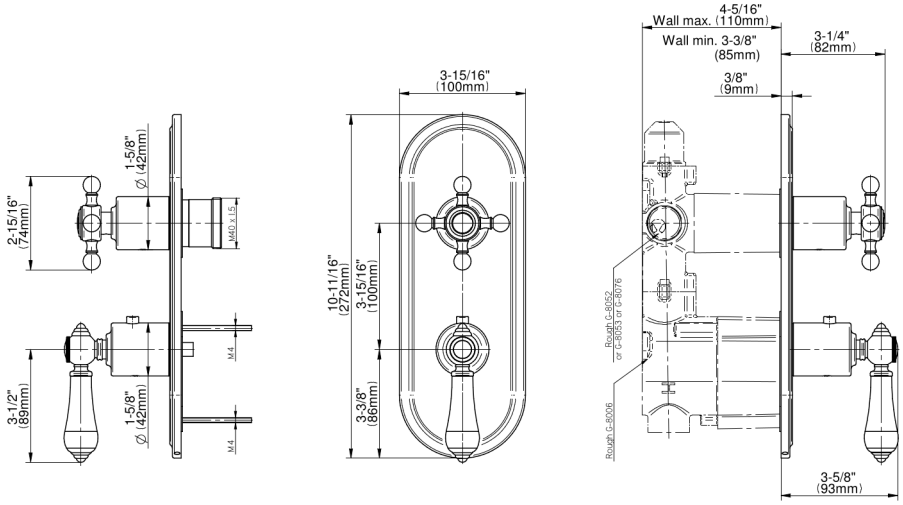
Adley Collection
G-8086-LM34C2-T
Adley M-Series Valve Trim with Two Handles