Lauren Collection
G-8031-LM22E-T
Lauren M-Series Thermostatic Valve Trim with Handle

Product Features

- Single metal handle and decorative trim plate
- Use with G-8006 thermostatic rough valve

Code compliance

- ADA

Available Finishes
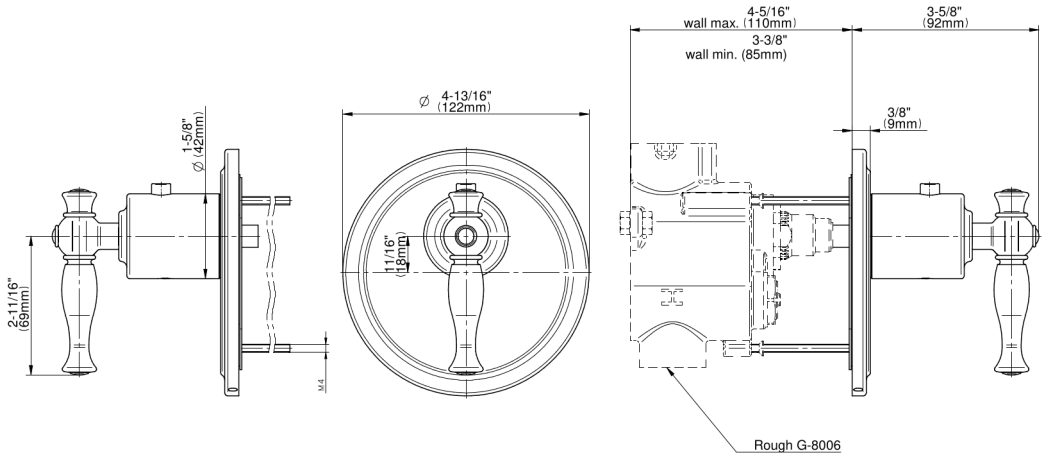
Lauren Collection
G-8031-LM22E-T
Lauren M-Series Thermostatic Valve Trim with Handle