Sento Collection
G-8069-LM42E1-T
Sento M-Series 3-Way Diverter Valve Trim with Handle

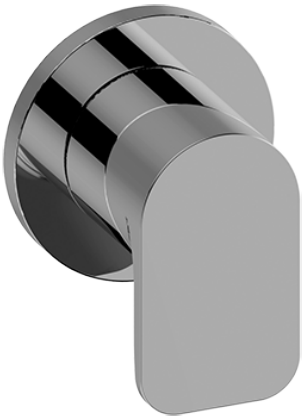

Product Features

- Single metal handle and decorative trim plate
- Use with G-8053 3-Way Diverter Control Valve WITH Off Function

Code compliance

- ADA

Available Finishes
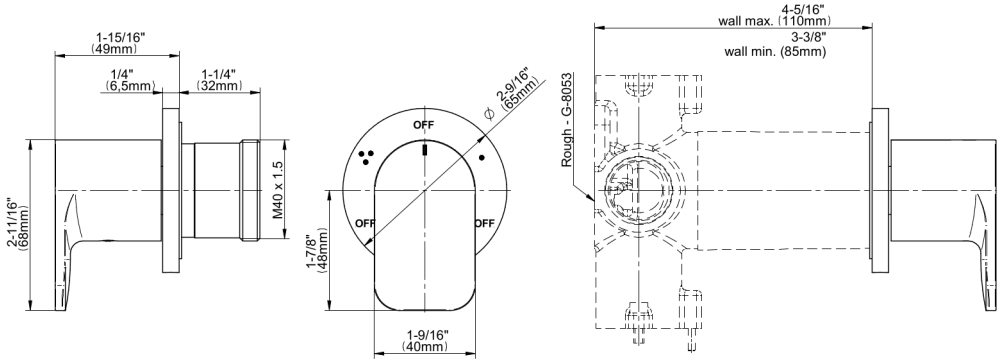
Sento Collection
G-8069-LM42E1-T
Sento M-Series 3-Way Diverter Valve Trim with Handle