Adley Collection
G-8031-C2E-T
Adley M-Series Thermostatic Valve Trim with Handle

Product Features

- Single metal handle and decorative trim plate
- Use with G-8006 thermostatic rough valve

Code compliance

- ADA

Available Finishes
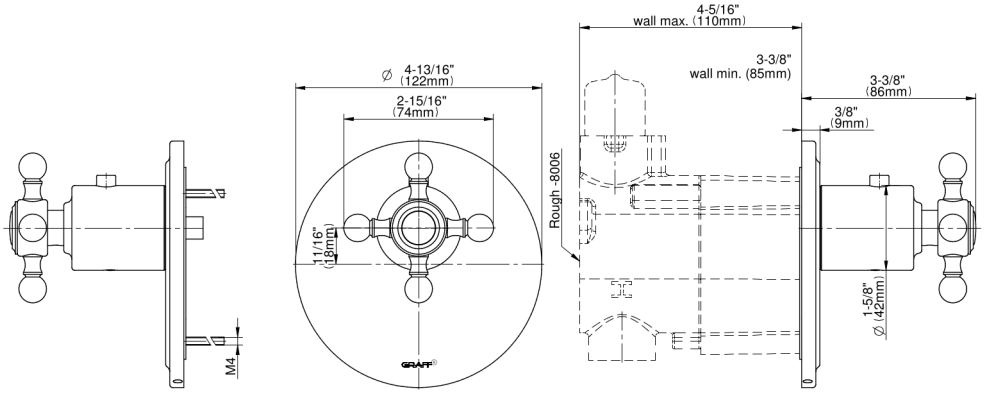
Adley Collection
G-8031-C2E-T
Adley M-Series Thermostatic Valve Trim with Handle