G-8528
Transitional 18” Ceiling Shower Arm

Product Features

- Includes arm and round flange
- 1/2
- For use with all showerheads

Available Finishes
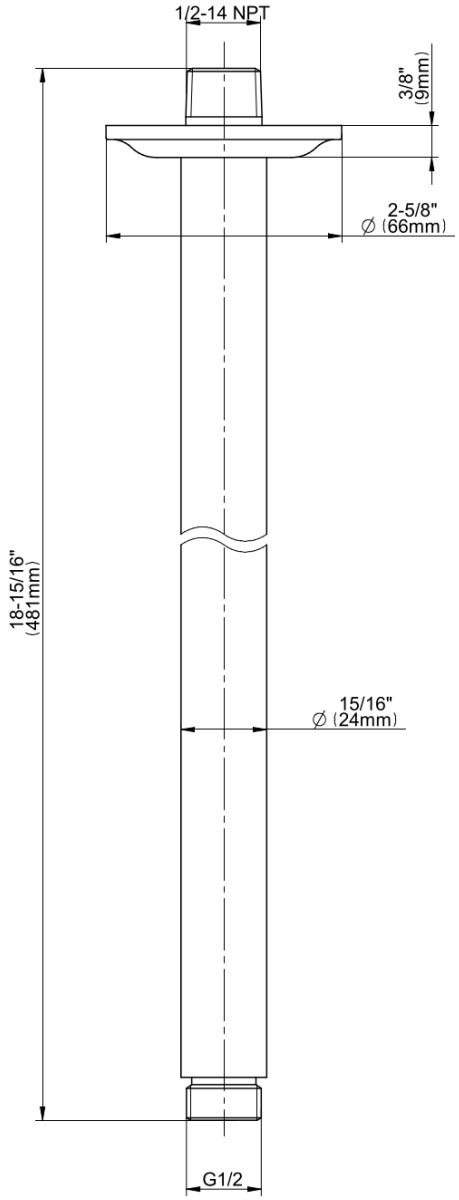
G-8528
Transitional 18" Ceiling Shower Arm