G-9810
Toilet Brush Holder

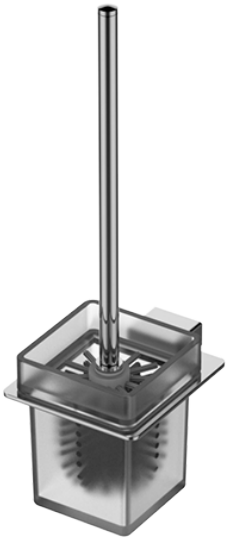

Available Finishes
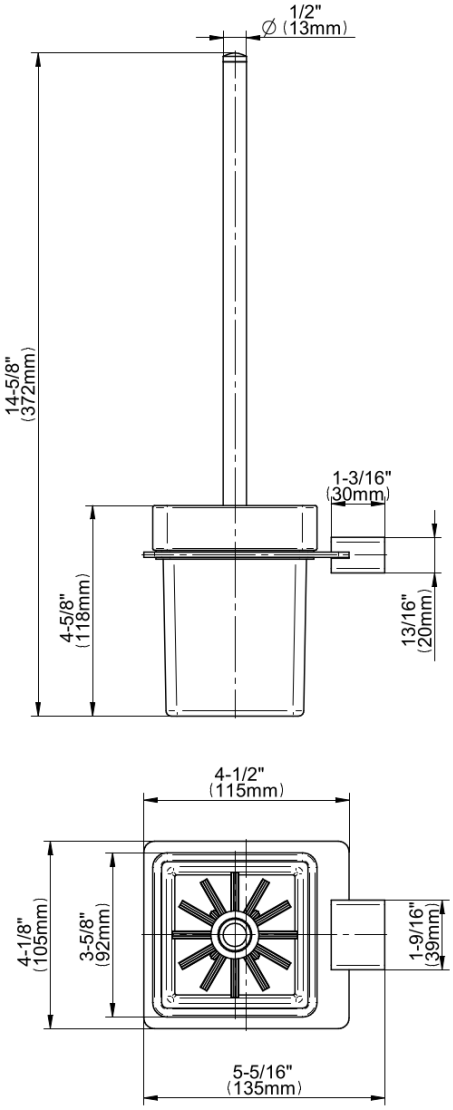
G-9810
Toilet Brush Holder