Incanto Collection
G-11255-LM55B-T
Incanto Deck-Mounted Handshower & Diverter Set

Product Features

- Matches G-11250 Roman tub set
- 1 11/32” hole cutout (x2)
- To complete package, you must order Rough Valve

Code compliance

- ADA

Available Finishes
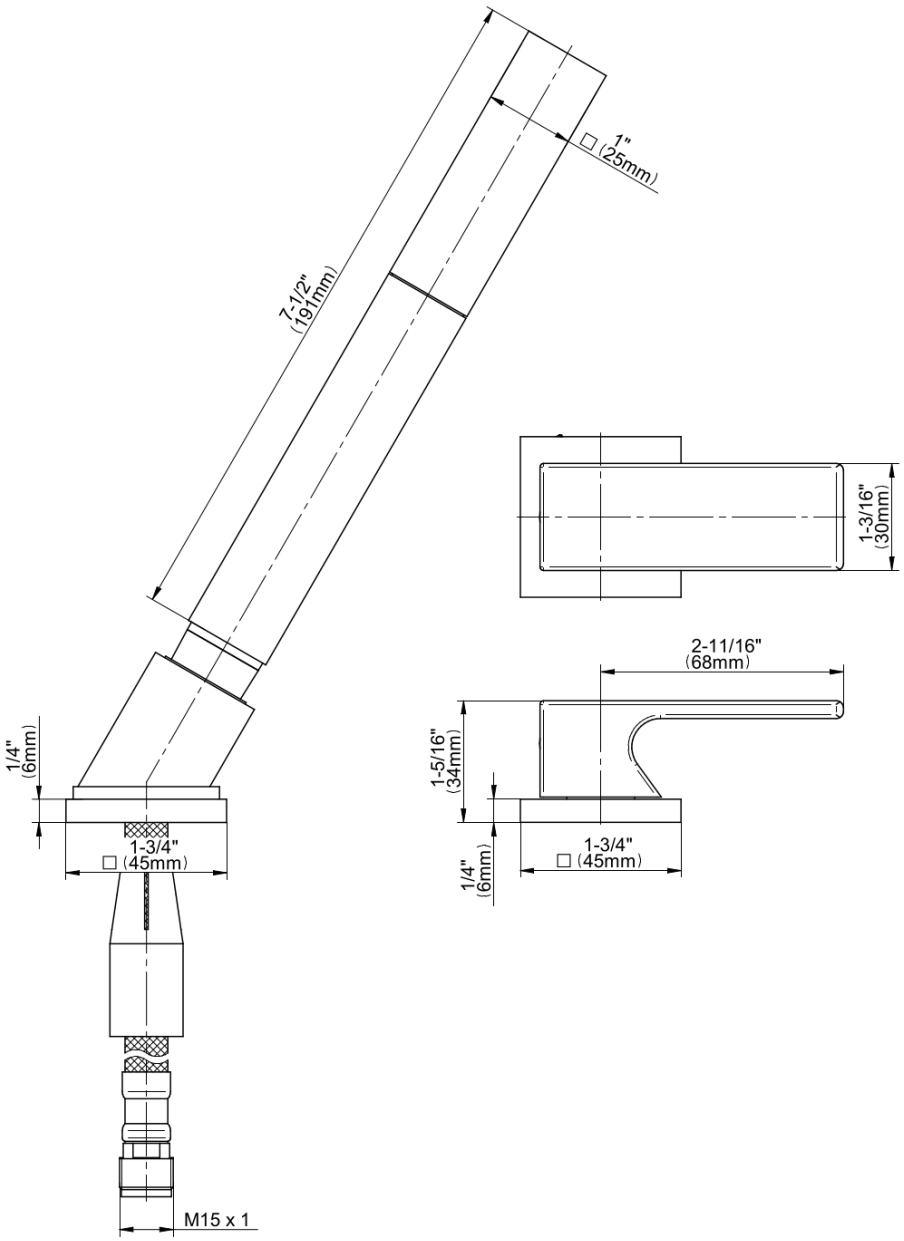
Incanto Collection
G-11255-LM55B-T
Incanto Deck-Mounted Handshower & Diverter Set