Camden Collection
G-6950-C16B-T
Camden Roman Tub

Product Features

- Matching deck-mounted handshower & diverter set available
- Includes white HC/ and finished metal inserts

Available Finishes
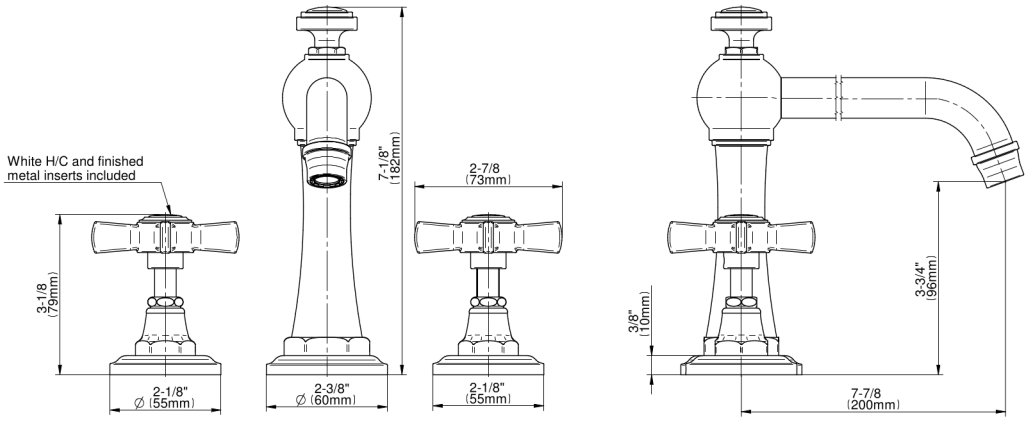
Camden Collection
G-6950-C16B-T
Camden Roman Tub