Camden Collection
G-8088H-ALM48C16-T
M-Series Valve Horizontal Trim with Four Handles

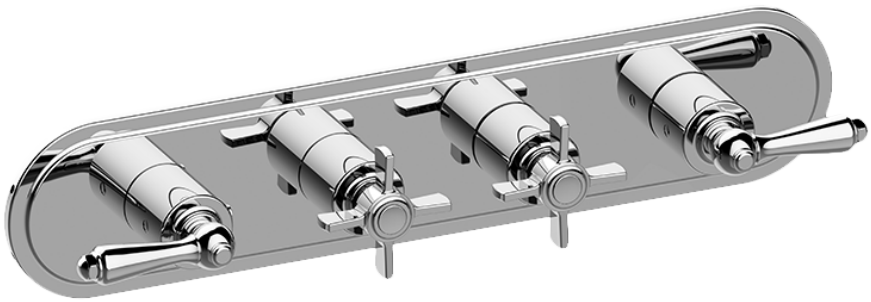

Product Features

- Four metal handles, decorative trim plate
- Use with M-Series rough valves
- ALM48C16 handles should not be used with 2-way or 3-way diverter valves

Code compliance

- ADA

Available Finishes
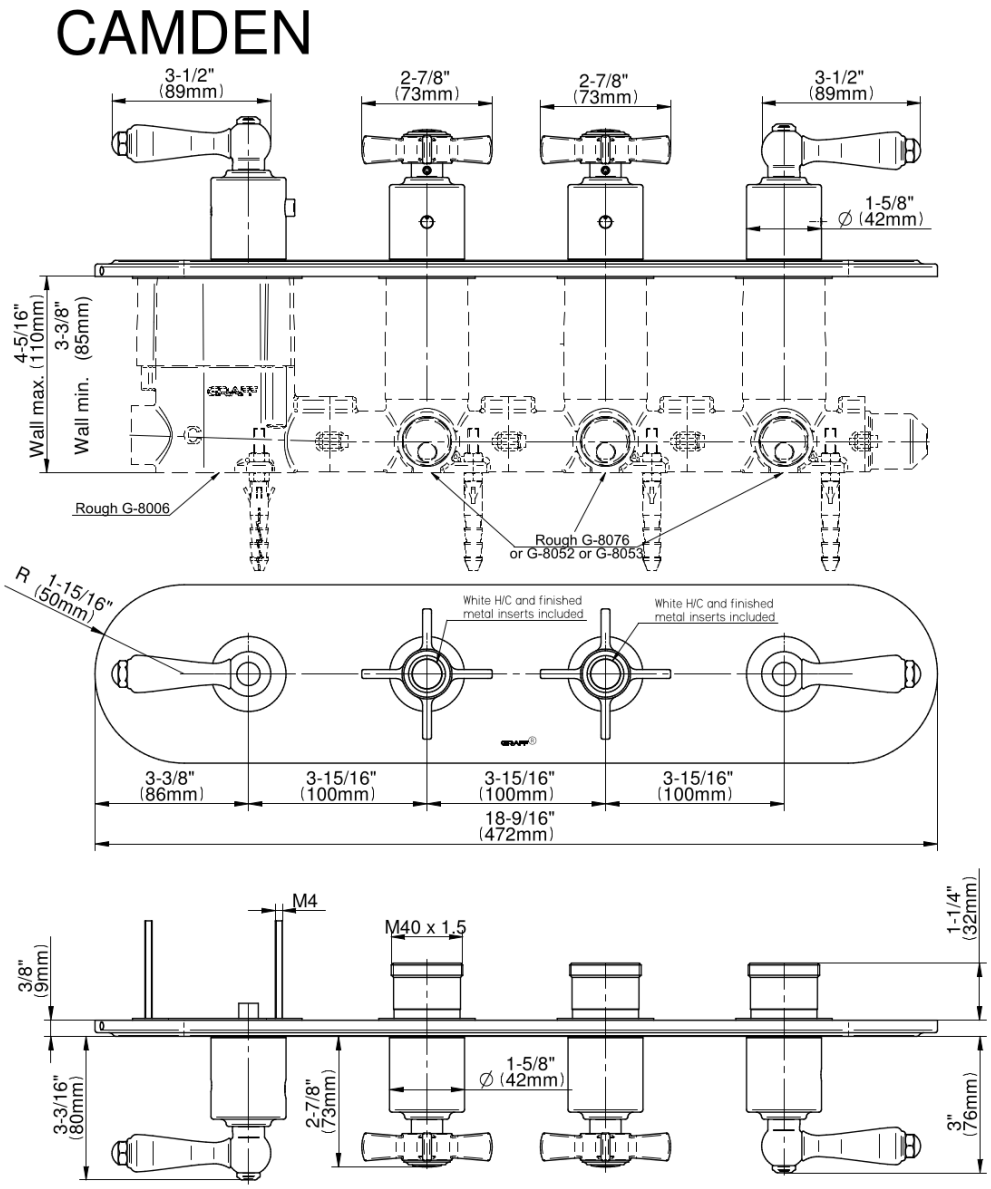
Camden Collection
G-8088H-ALM48C16-T
M-Series Valve Horizontal Trim with Four Handles