M.E. 25 Collection
G-5210-C5
Bar/Prep Faucet

Product Features

- Single-hole installation
- Swivel spout
- Aerated flow rate ? 1.8 max gpm
- Optional G-9306 CALGreen water-saving aerator reduces waterflow from 2.2 to 1.8 gpm
- Reverse Osmosis Compatible w/ Re-Mineralized System

Available Finishes
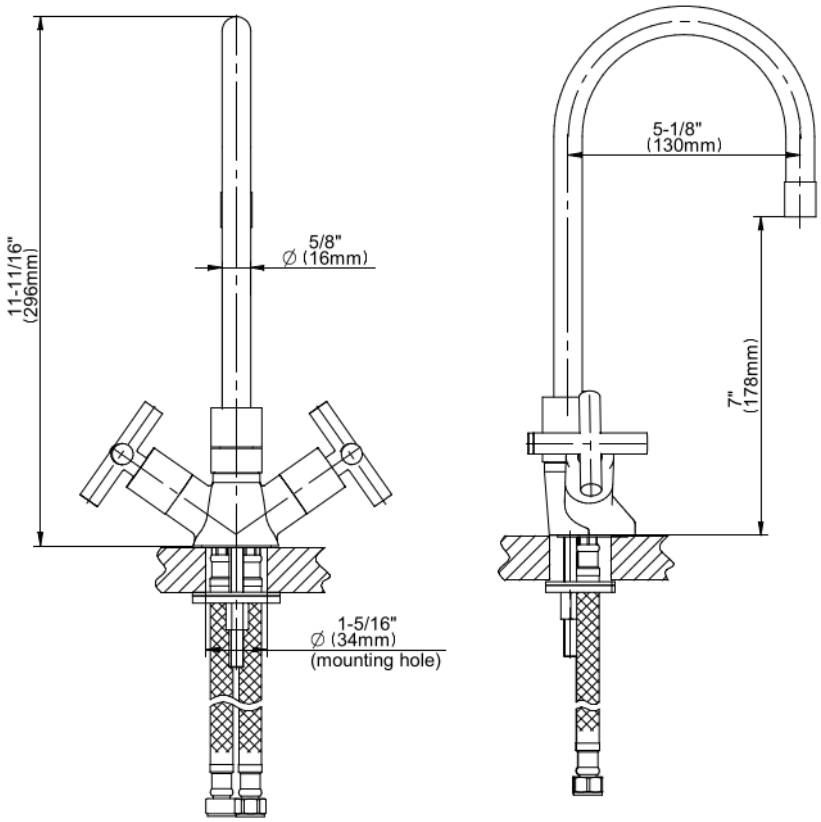
M.E. 25 Collection
G-5210-C5
Bar/Prep Faucet