Finezza Collection
G-6811-C15B
Finezza DUE Widespread Lavatory Faucet

Product Features

- Installs on 8
- Aerated flow rate ?1.2 max gpm
- 1-3/16" hole cutout (x3)
- Includes push-top umbrella pop-up drain w/overflow
- Optional decorative trap G-9973

Code compliance

- ADA
- CALGreen

Available Finishes
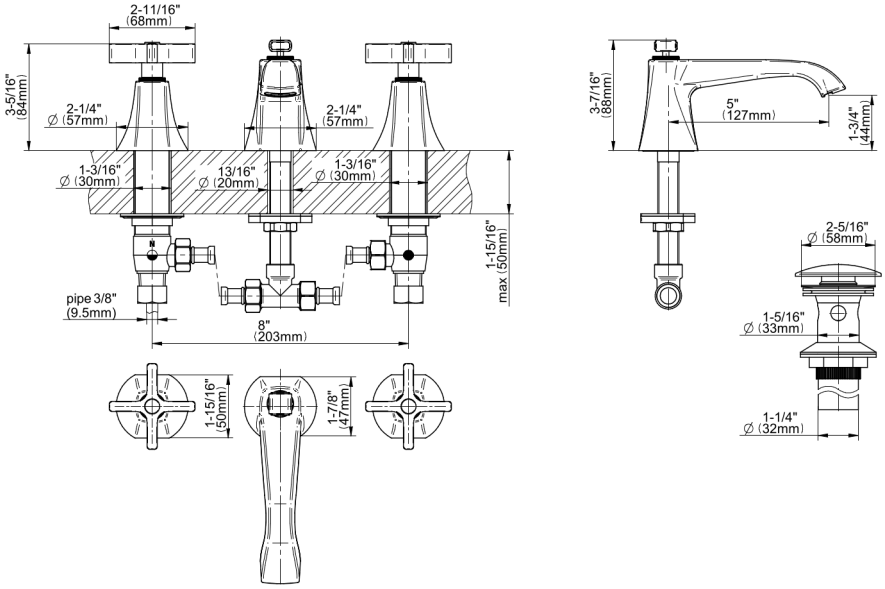
Finezza Collection
G-6811-C15B
Finezza DUE Widespread Lavatory Faucet