G-8652
Finezza UNO Wall Bracket for Handshower

Product Features

- Solid brass construction

Available Finishes
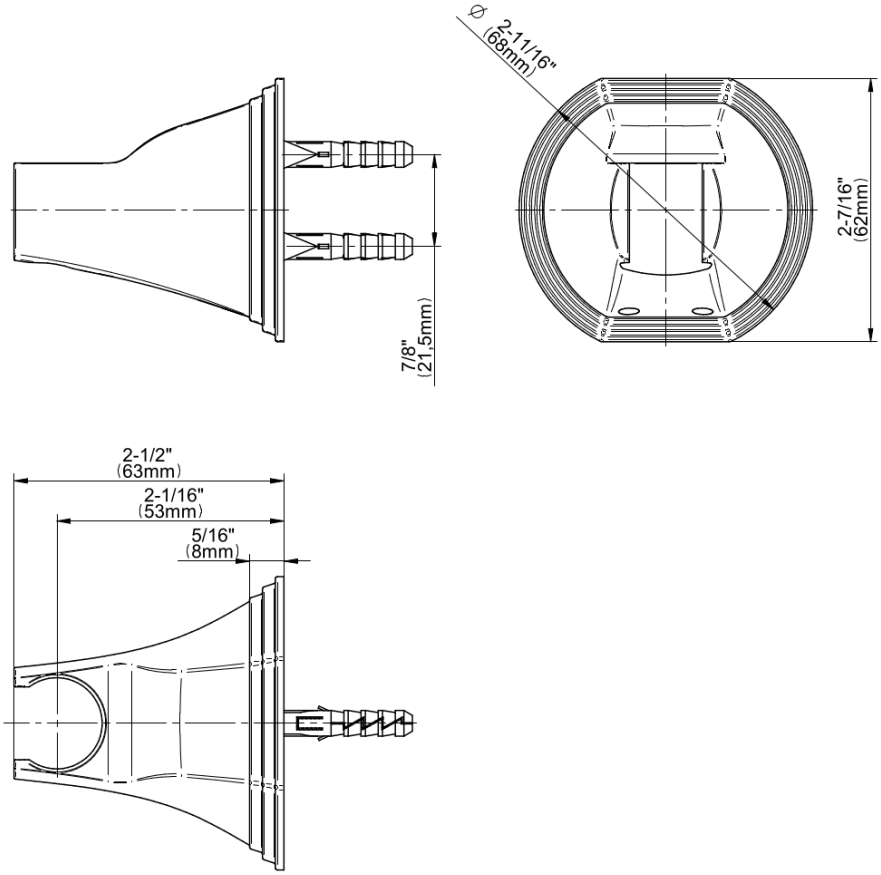
G-8652
Finezza UNO Wall Bracket for Handshower