Duxbury Collection
G-4815
Duxbury Kitchen Faucet w/ Side Spray

Product Features

- Two-hole installation
- Swivel spout
- Includes matching side spray
- Aerated flow rate ? 1.8 max gpm
- Reverse Osmosis Compatible w/ Re-Mineralized System

Code compliance

- ADA
- CALGreen

Available Finishes
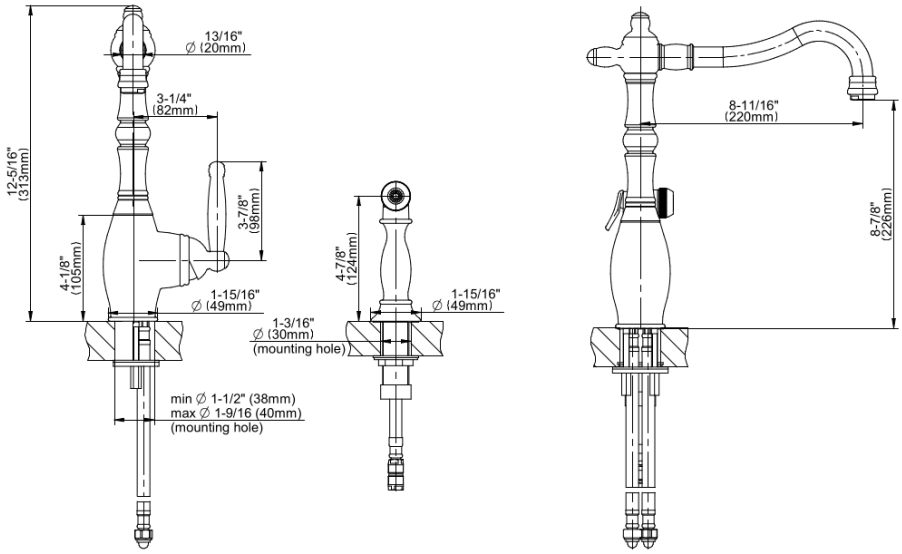
Duxbury Collection
G-4815
Duxbury Kitchen Faucet w/ Side Spray