Finezza Collection
G-9503
Finezza UNO Soap/Lotion Dispenser

Available Finishes
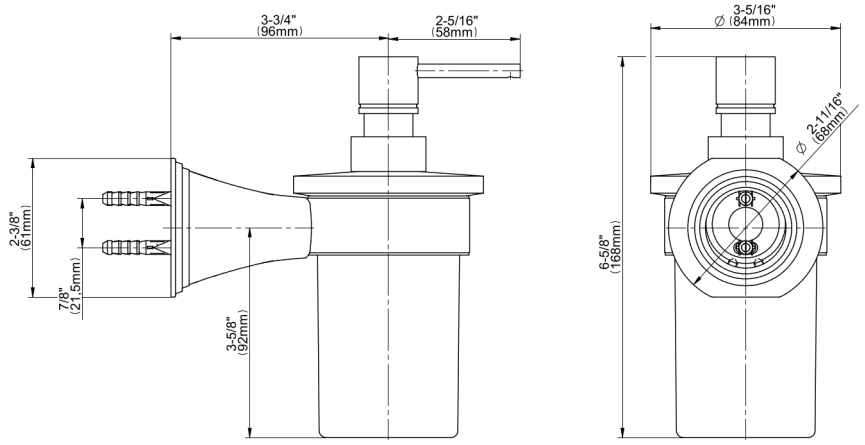
Finezza Collection
G-9503
Finezza UNO Soap/Lotion Dispenser