BATHROOM

Finezza UNO Soap Dish & Holder

G-9501

Finishes

24K Gold	24K Brushed Gold	Brushed Brass PVD	Architectural Black™	Brushed Nickel	Brushed Onyx PVD®	Brushed OR'osa PVD®	Gunmetal
Matte Black	Olive Bronze	Onyx PVD®	Polished Brass PVD	Polished Chrome	Polished Nickel	OR'osa PVD®	Unfinished Brass
Unfinished Brushed Brass	Vintage Brushed Brass	Architectural White					

G-9501

FINEZZA Series

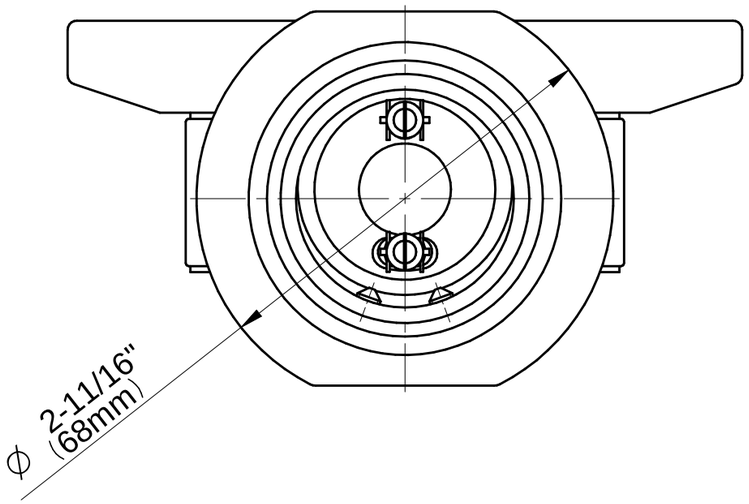

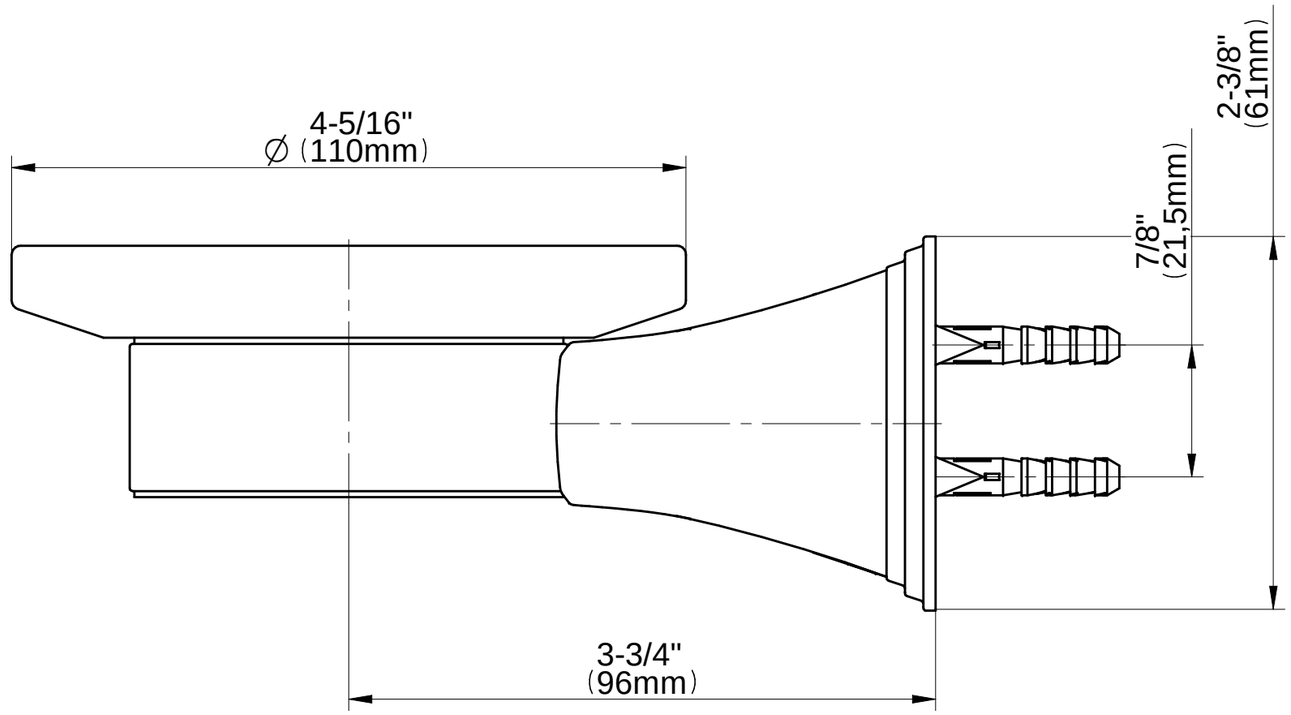

GRAFF®

CUTTING EDGE DESIGN