Finezza Collection
G-8513
Finezza 12" Shower Arm

Product Features

- Includes arm and solid flange
- 1/2
- For use with all showerheads (especially G-8406)

Available Finishes
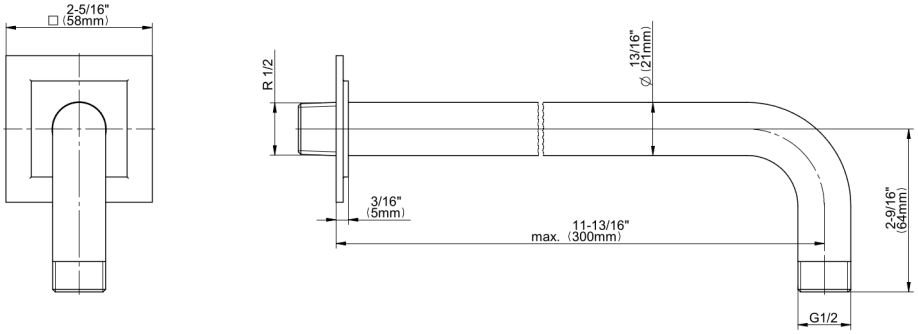
Finezza Collection
G-8513
Finezza 12" Shower Arm