Finezza Collection
G-8370
Finezza Showerhead with Arm

Product Features

- 9” low-profile rain showerhead
- 12” shower arm and flange
- 126 no-clog, easy-clean rubber spray nozzles
- Showerhead flow rate ? 1.8 max gpm

Code compliance

- CALGreen

Available Finishes
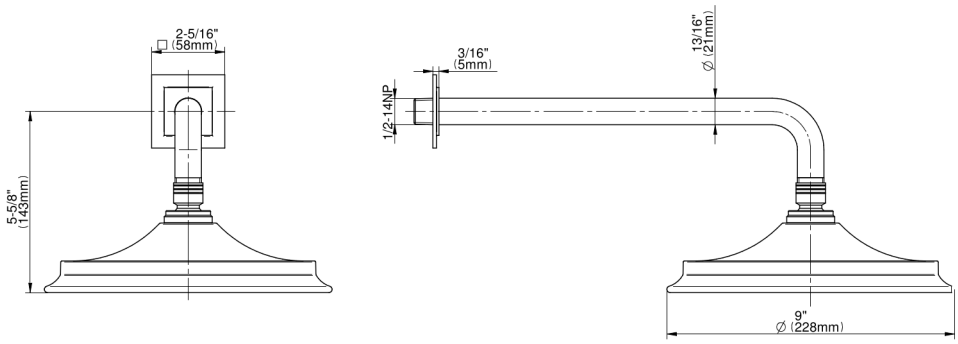
Finezza Collection
G-8370
Finezza Showerhead with Arm