D455557
Opulence® Single Handle Pull-Down Kitchen Faucet

SPECIFICATIONS

Features/Benefits

- DockForce® Magnetic Docking Technology
- SnapBack® Retraction System
- Easily Adjustable GripLock® Weight
- 18 1/16” Spout Height, 8 7/16” Spout Reach
- 1.75 gpm (6.6 L/min) Max Flow @ 60 psi
- 2 Function Spray/Aerated Stream
- Ceramic Disc Cartridge
- 360 Degree Swivel Spout
- Single Hole Installation
- Optional Deck Plate, DA607955 Included

Available Color/Finishes

Color	Description
	Chrome

Please see danze.com or current price list for available finishes.
Finish is defined by additional suffix.

Standards & Certifications

NSF/ANSI 372

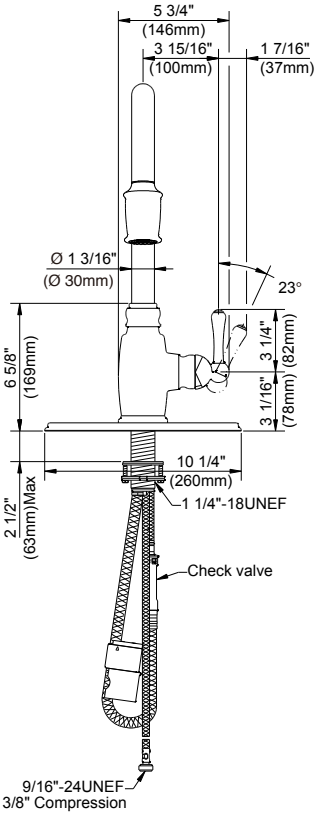

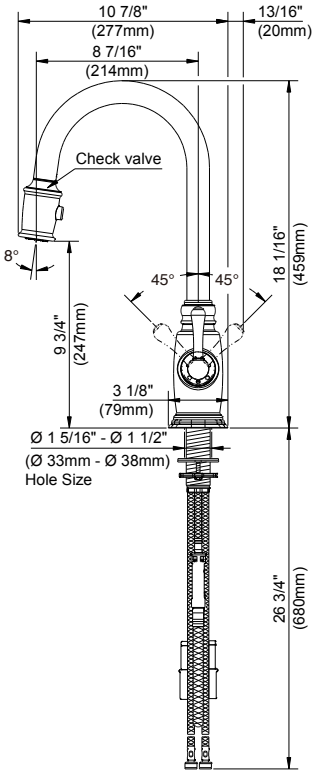

Submittal Information:

Name: _____ Contractor: _____

Location: _____ Contact #: _____

WARRANTY: Danze products are covered by a manufacturer’s lifetime limited warranty for manufacturing defects.